CODE DATA SUMMARY

PROJECT DESCRIPTION:
NEW GROUND UP 7,500 SQ FT PROFFESIONAL DENTAL OFFICE BUILDING
LOCATED AT 8631 HWY N, LAKE ST LOUIS MO, 63367

JURISDICTION:
CITY OF LAKE SAINT LOUIS, 63367
WENTZVILLE FIRE PROTECTION DISTRICT, WENTZVILLE MISSOURI 63385

BUILDING CODES:
CONSTRUCTION SHALL CONFORM TO THE FOLLOWING CODES:

2015 INTERNATIONAL BUILDING CODE, I.B.C
2014 NATIONAL ELECTRICAL CODE, N.E.C.
2015 INTERNATIONAL MECHANICAL CODE, I.M.C.
2015 INTERNATIONAL PLUMBING CODE, I.P.C.
2015 INTERNATIONAL FIRE CODE, I.F.C
2010 ICC/ANSI A117.1 - ACCESSIBILITY CODE, I.A.C.

CHAPTER 3 - USE GROUP:
USE GROUP: B, BUSINESS
PROPOSED USE: PROFESSIONAL DENTAL OFFICE BUILDING

CHAPTER 6 - TYPE OF CONSTRUCTION:
B, NS, TYPE VB
BASE ALLOWABLE AREA: 9,000 SQ. FT.
ACTUAL BUILDING AREA: 7,500 SQ.FT.

BASE BUILDING HEIGHT: B - 2 STORIES/40 FT.
ACTUAL BULIDING HEIGHT: 1 STORY 27' - 2"

CHAPTER 5 - HEIGHT AND AREA:
ALLOWABLE HEIGHT: 40'
ACTUAL HEIGHT: 27'-2"

ALLOWABLE AREA: 9,000 S.F.
ACTUAL AREA: 7,500 S.F.

CHAPTER 6 - TYPE OF CONSTRUCTION
VB - UNPROTECTED

CHAPTER 6 - FIRE RESISTANCE RATING CHART:
FIRE-RESISTANCE RATING REQUIREMENTS FOR BUILDING ELEMENTS: NONE

CHAPTER 7 - FLAME SPREAD:
PRE SECTION 803 AND 805 - ALL ITEMS 25 OR LESS TESTED BY ASTM.E84

CHAPTER 7 - SMOKE DEVELOPED:
PER SECTIONS 803 AND 805 - ALL ITEMS 450 OR LESS, TESTED BY ASTM.E84

CHAPTER 8 - INTERIOR FINISHES:
SHALL COMPLY WITH THE 2015 IBC CHAPTER 8

CHAPTER 9 - FIRE PROTECTION SYSTEMS:
NO AUTOMATIC FIRE SPRINKLER SYSTEM

CHAPTER 9 - FIRE EXTINGUISHERS:
PORTABLE FIRE EXTINGUISHERS SHALL BE PROVIDED IN ACCORDANCE WITH SECTION 906 OF THE 2015 IBC AND LOCATED BY FIRE MARSHAL

CHAPTER 10 - OCCUPANCY LOADS & MEANS OF EGRESS:
FLOOR AREA: 7,500 S.F. / 100 = 75 OCCUPANTS

EGRESS
2 MEANS OF EGRESS REQURIED, 3 PROVIDED

SECTION 1008.1.9 - EGRESS DOORS SHALL BE READILY OPENABLE FROM THE EGRESS SIDE WITHOUT THE USE OF A KEY OR SPECIAL KNOWLEDGE OR EFFORT.

SECTION 1016 - MAXIMUM TRAVEL DISTANCE LESS THAN 200'

SECTION 1008.1.5 - THERE SHALL BE A FLOOR OR LANDING ON EACH SIDE OF A DOOR. SUCH FLOOR OR LANDING SHALL BE AT THE SAME ELEVATION ON EACH SIDE OF THE DOOR.

CHAPTER 29 - PLUMBING SYSTEMS:
PLUMBING FIXTURE REQUIREMENTS:

PLUMBING FIXTURE	CALCULATION	PROVIDED
WATER CLOSETS: (38 MEN & 38 WOMEN)	1 PER 25 FOR THE 1ST 50	5 UNISEX
LAVATORIES: (38 MEN & 38 WOMEN)	1 PER 80	5 UNISEX

DOORS:
ALL DOORS SHALL NOT REQUIRE MORE THAN 5LBS OF FORCE TO OPEN

SIGNS:
ALL SIGNS TO COMPLY WITH "SECTION 1111 SIGNAGE" OF THE 2015 IBC

NOTES:
ALL CURTAINS, DRAPERIES, HANGINGS AND OTHER DECORATIVE MATERIALS SUSPENDED FROM WALLS OR CEILING SHALL BE NONCOMBUSTIBLE OR BE MAINTAINED FLAME-RESISTANT. THE PERMISSIBLE AMOUNT OF NONCOMUSTIBLE DECORATIVE HANGINS SHALL NOT BE LIMITED. THE PERMISSIBLE AMOUNT OF FLAME-RESISTANT DECORATIVE HANGINS SHALL NOT EXCEED 10 PERCENT OF THE TOTAL WALL AND CEILING AREA.

FIRE BLOCKING WILL BE PROVIDED IN ALL WALLS TALLER THAN 8'-0" THAT DO NOT CONTAIN FIBERGLASS BATT INSULATION.

PROVIDE ALL REQUIRED LABELING FOR ELECTRICAL, MECHANICAL AND STORAGE AREAS PER 2015 ICC CODES.

CONTRACTOR'S NOTES:

1. THE CONSTRUCTION DOCUMENTS HAVE BEEN CAREFULLY PREPARED BUT MAY NOT DIPICT EVERY CONDITION TO BE ENCOUNTERED. IT IS THEREFORE THE GENERAL CONTRACTORS & SUBCONTRACTORS RESPONSIBILITY TO FIELD VERIFY ALL CONDITIONS OF AFFECTED WORK PRIOR TO SUBMITTING A BID OR STARTING ANY WORK. IF CONDITIONS DIFFER, OR ADDITIONAL WORK IS REQUIRED BEYOND THAT STATED IN THE CONSTRUCTION DOCUMENTS, IT IS THE CONTRACTORS RESPONSIBILITY TO BRING SUCH MATTERS TO THE ATTENTION OF THE ARCHITECT IN A RASONABLE TIME PERIOD.
2. PRIOR TO THE BID SUBMISSION, CONTRACTOR SHALL INCULDE SUCH INSTANCES IN THEIR BID SUM OR QUALIFY IN THE BID SUBMITTAL.
3. ALL CONSTRUCTION DOCUMENTS REPRESENT A COMPREHENSIVE SCOPE OF WORK. IT IS THE CONTRACTOR'S RESPONSIBILITY TO REFERENCE ALL DRAWINGS, SPECIFICATIONS, ADDENDUM AND CHANGE ORDERS (IF APPLICABLE) TO VERIFY THEIR RESPECTIVE SCOPE OF WORK.
4. CONTRACTOR SHALL FIELD VERIFY ALL DIMENSIONS PRIOR TO ORDERING MATERIAL, EQUIPMENT, MILLWORK, ECT.

GENERAL NOTES:

1. BAALMAN ARCHITECTS IS ISSUING THIS SET OF CONSTRUCTION DOCUMENTS TO FACILITATE CONSTRUCTION BY EXPRESSING THE DESIGN CONCEPT OF THIS PROJECT. ADDITIONAL DETAILED SHOP DRAWINGS AND SUBMITTALS WILL BE REQUIRED FOR PROCURING, PLACING AND CONSTRUCTING THE FINISHED WORK.
2. BAALMAN ARCHITECTS ASSUMES THE GENERAL CONTRACTOR HAS INCLUDED IN HIS BID THE HIGHEST QUAILTY AND GREATEST QUANITITY FOR THE PURPOSE OF RESOLVING ANY CONFLICTS IN THE CONSTRUCTION DOCUMENTS WHICH ARE IMPLIED OR UNDEFINED.
3. ALL WORK SHALL COMPLY WITH THE CURRENT REDERAL, STATE AND ALL LOCAL CODES AND ORDINANCES. CONTRACTOR SHALL VERIFY ALL DIMENSIONS AND SITE CONDITIONS AND SHALL REPORT ANY INCONSISTENCIES TO THE ARCHITECT.
4. DRAWINGS ARE NOT TO BE SCALED. DIMENSIONAL DISCREPANCIES SHALL BE CLARIFIED WITH THE ARCHITECT.
5. ALL DIMENSIONS ARE TO FACE OF CYP. BOARD, CONCRETE, MASONRY OR BRICK UNLESS OTHERWISE NOTED.
6. THE ARCHITECT SHALL REVIEW FOR APPEROVAL ALL COLOR SAMPLES. MANUFACTUREERS SHALL VERIFY CONFORMACE WITH THE DESIGN INTENT AND SCOPE OF THE CONTRACT DOCUMENTS.
7. CONTRACTOR SHALL VERIFY LOCATION AND SHALL PROVIDE PROTECTION FOR UTILITES WITHIN THE WORK AREA, WHETHER OR NOT INDICATED IN THE DRAWINGS.
8. CONTRACTOR SHALL NOTIFY UTILITY COMPANY AND OWNER IMMEDIATELY SHOULD SERVICE BE INTERRUPTED.
9. CONTRACTOR SHALL TAKE STEPS NECESSARY TO PREVENT EROSION DAMGE ON OR OFF THE SITE AND REPAIR ANY DAMAGE RESULTING FROM THIS WORK AT NO COST TO THE OWNER.
10. WHERE POSSIBLE THE CONTRACTOR SHALL AVOID DAMAGING EXISTING TRESS AND LANDSCAPING. CONTRACTOR SHALL COORDINATE THE DESTRUCTION OF ANY LANDSCAPE WITH THE ARCHITECT.
11. CONTRACTOR SHALL REMOVE ALL SURPLUS MATERIALS, FALSE WORK, TEMPORARY STRUCTURES, INCLUDING: FOUNDATIONS AND DEBRIS OF ANY NATURE RESULTING FROM THEIR OPERATIONS, AND PUT THE SITE IN A NEAT AND ORDERLY CONDITION.
12. CONTRACTORS SHALL VERIFY ALL EXISTIN CONDITIONS AND DIMENSIONS AT SITE PRIOR TO SUBMITTING PROPOSAL ON THE PROJECT AND NOTIFY THE ARCHITECT AS TO ANY DISCREPANCIES OR CHANGES DISCOVERED.
13. SUBCONTRACTORS SHALL FAMILIARIZE THEMSELVES WITH ALL PROTIONS OF THE DRAWINGS, SPECIFICATIONS, ADDENDUM AND CHANGE ORDERS THAT PERTAIN TO THEIR WORK.
14. IT IS THE GENERAL CONTRACTOR'S RESPONSIBILITY TO COORDINATE, LOCATE AND CONFIRM ALL FLOOR SINK, UNDERGROUND / OVERHEAD PLUMBING AND ELECTRICAL STUB-UPS.
15. ALL EXPOSED UNFINISHED METAL AND WOOD SHALL BE PAINTED AS PER DRAWINGS AND SPECIFICATIONS.
16. ALL FINISHES AND MATERIALS, COLORS AND TEXTURES SHALL BE VERIFIED WITH THE OWNER AND ARCHITECT PRIOR TO INSTALLATION, FABRICATION OR ORDERING.

ACCESSIBILITY:

1. H.C. ACCESS TO THESE FACILITES SHALL BE PROVIDED AT PRIMARY ENTRANCE.
2. THE SLOPE OF WALKS SHALL NOT EXCEED MAX., CROSS SLOPE 2% WALKING SURFACE SLOPING GRATER THAN 2% SHALL BE SLIP RESISTANT.
3. EVERY REQUIRED EXIT DOORWAY SHALL BE SIZED FOR A DOOR NOT LESS THAN 3 FT. WIDE BY NOT LESS THAN 6'-8" HIGH CAPABLE OF OPENING 90 DEGREES AND MOUNTED SO THAT THE CLEAR WIDTH OF THE EXIT WAY IS 32" MIN.
4. THRESHOLD TO BE A MAX. 1/4" ABOVE ADJACENT FINISH FLOOR.
5. MAXIMUM EFFORT TO OPERATE DOORS SHALL NOT EXCEED 5 LB.
6. THE BOTTOM 10" OF ALL DOORS EXCEPT AUTOMATIC AND SLIDING SHALL HAVE A SMOOTH UNINTERRUPTED SURFACE.
7. PROVIDE LEVER TYPE HARDWARE, PANIC BARS, PUSH - PULL ACTIVATING BARS, OR OTHER HARDWARE DESIGNED TO PROVIDE PASSAGE WITHOUT REQUIRING THE ABILITY TO GRASP THE OPENING HARDWARE. (30" TO 44" A.F.F.)
8. ALL DOORWAYS LEADING TO SANITARY FACILITES SHALL HAVE 32" CLEAR UNOBSTRUCTED OPENINGS.
9. INSULATE HOT WATER AND DRAIN PIPES AT HAND SINKS.
10. FAUCET CONTROLS SHALL BE OPERABLE WITH ONE HAND AND NOT REQUIRE GRASPING, PINCHING, OR TWISTING. FAUCET TO HAVE MAX. 5 LB. OPERATING FORCE.

New Proffesional Dental Office: Hawk Ridge Dental Care

8631 HWY N
Lake Saint Louis, Missouri 63367

Issue for:Permit & Bid 03/17/2023

ARCHITECT
Baalman Architects
#2 Daniel Drive
O'Fallon, Missouri 63366
phone: 573.123.4567
mike@baalmanarchitects.com

Collin Tucker, Project Manager
collin@baalmanarchitects.com
Mobile: 636.290.4889

MEP ENGINEER
J-Squared Engineering
2400 Bluff Creek Dr., Suite 101
Columbia, MO 65201
phone: 573.234.4492

JP Watson
jp@j-squaredeng.com

STRUCTURAL ENGINEER
Crockett Engineering
1000 W Nifong Blvd Bldg. 1
Columbia, MO 65203
phone: 573.447.0292

Greg Linneman
GLinneman@crockettengineering.com

CIVIL ENGINEER
Civil & Environmental Consultants, Inc.
700 Cherrington Parkway
Moon Township, PA 15108
phone: 412.429.2324

Contact
contactemail@gmaill.com

INTERIOR DESIGN
Design Ergonomics Inc.
198 Airport Rd
Fall River, MA 02720
phone: 800.275.2547

Tim Gagnon
tgagnon@desergo.com

GENERAL
G001 COVER SHEET

CIVIL
C101 PROVIDED BY CEC ENGINEERING UNDER SEPARATE COVER

STRUCTURAL
S100 GENERAL STRUCTURAL DATA
S200 FOUNDATION PLAN
S210 FOUNDATION DETAILS
S211 FOUNDATION DETAILS
S212 FOUNDATION DETAILS
S300 FRAMING PLAN
S310 FRAMING DETAILS
S311 FRAMING DETAILS
S312 FRAMING DETAILS

ARCHITECTURAL
A1.1 ARCH SITE PLAN
A2.1 FIRST FLOOR PLAN
A3.1 ROOF PLAN
A4.1 BUILDING ELEVATIONS
A4.2 BUILDING ELEVATIONS
A5.1 BUILDING SECTIONS
A6.1 WALL SECTIONS
A6.2 WALL SECTIONS
A7.1 DETAIL SECTIONS
A8.1 RENDERINGS

INTERIORS
DE0.2 FULL COLOR RENDERS
DE1.0 FLOOR PLAN
DE1.1 DIMENSIONED FLOOR PLAN
DE1.2 FINISH PLAN
DE1.3 REFLECTED CEILING PLAN AND DETAILS
DE2.0 ENLARGED RECEPTION PLAN AND DETAILS
DE2.1 ENLARGED RECEPTION PLAN AND DETAILS
DE2.2 ENLARGED STERILIZATION PLAN & DETAILS
DE2.3 ENLARGED RESTROOM PLANS AND ELEVATIONS
DE2.5 INTERIOR ELEVATIONS
DE2.6 INTERIOR ELEVATIONS
DE3.0 ENLARGED TREATMENT ROOM PLANS
DE3.1 SECTIONS AND DETAILS
DE3.2 SECTIONS AND DETAILS
DE4.0 SCHEDULES AND DETAILS
DE4.1 DOOR SCHEDULE AND DETAILS
DE5.0 MECHANICAL ROOM DETAILS

MECHANICAL, ELECTRICAL, PLUMBING
MEP1 MECHANICAL ELECTRICAL PLUMBING COVER SHEET
MEP2 SITE UTILITIES PLAN
MEP3 ROOF PLAN
M101 HVAC PLAN
M501 HVAC DETAILS
M601 HVAC SCHEDULES
EP101 POWER PLAN
EL101 LIGHTING PLAN
EL102 SOFFIT & PARAPET LIGHTING PLAN
E501 ELECTRICAL DETAIL
E601 ELECTRICAL SCHEDULES
PS101 SANITARY SEWER PLAN
PW101 WATER & GAS PLAN
PD101 AIR, VAC, & DENTAL GAS PLAN
P501 PLUMBING DETAILS & SCHEDULES

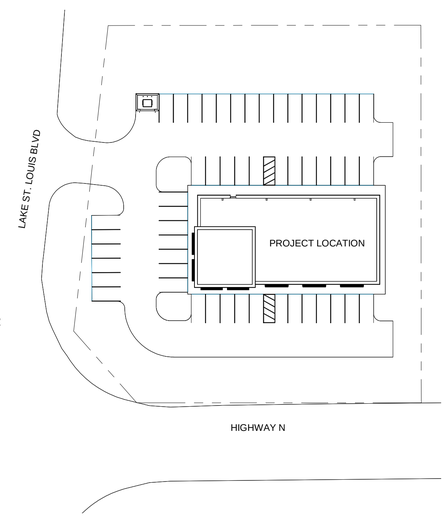

01 LOCATION PLAN
G001 1" = 50'-0"

COPYRIGHT 2022 BAALMAN ARCHITECTS

BAALMAN ARCHITECTS
2 Daniel Dr.
OFallon, Mo 63366
ph: 314.640.6212

Michael J. Baalman
ARCHITECT
License#: A-2012004035
Certicicate of Authority:
2014003655

New Build Dentist Office For:
Hawk Ridge Dental Care
8631 HWY N
Lake Saint Louis, Missouri 63367

DATE	ISSUE	R#
03/17/2023	PERMIT & BID	1

STATE OF MISSOURI
MICHAEL J. BAALMAN
NUMBER A-2012004035
03-17-2023
ARCHITECT

Michael J. Baalman
ARCHITECT
License#: A-2012004035

PROJECT MANAGER: MJB
DRAWN BY: CJT

PROJECT NUMBER
21-042
DATE
03/17/2023

SHEET
G001
COVER SHEET

Hawk Ridge Dental Care

Lake Saint Louis, St. Charles County, Missouri

GENERAL NOTES

ELEVATION DATUM
SEE ARCHITECTURAL DRAWINGS OR SITE PLAN FOR FINISH FLOOR ELEVATIONS

DESIGN SPECIFICATIONS
2015 INTERNATIONAL BUILDING CODE

EARTHWORK
EARTHWORK OPERATIONS SHALL BE PERFORMED UNDER THE DIRECTION OF A PROFESSIONAL TESTING AGENCY TO ASSURE COMPLIANCE WITH THE RECOMMENDATIONS OF THE SOILS REPORT BY GEOTECHNOLOGY LLC DATED SEPTEMBER 30, 2022.

CONCRETE

CONCRETE WORK SHALL CONFORM TO ALL REQUIREMENTS OF THE CURRENT ACI 301, SPECIFICATIONS FOR STRUCTURAL CONCRETE FOR BUILDINGS, ACI 318 BUILDING CODE REQUIREMENTS FOR STRUCTURAL CONCRETE, ACI 305 SPECIFICATIONS FOR HOT WATER CONCRETE, AND ACI 306 SPECIFICATIONS FOR COLD WEATHER CONCRETE, WITH THE FOLLOWING ADDITIONAL REQUIREMENTS:

1. CONCRETE SHALL DEVELOP THE FOLLOWING 28-DAY MINIMUM COMPRESSIVE STRENGTH:
   - FOUNDATIONS – 3,000 PSI
   - CAST-IN-PLACE WALLS – 3,500 PSI
   - FLOOR SLAB – 4,000 PSI
   - EXTERIOR SLABS, WALLS AND CURBS – 4,000 PSI
2. ALL FOOTINGS SHALL BEAR ON UNDISTURBED SOIL OR ENGINEERED FILL.
3. CHLORIDE- BASED ADMIXTURES ARE PROHIBITED IN ALL REINFORCED CONCRETE.
4. REINFORCING STEEL SHALL CONFORM TO ASTM A615, A616, OR A617, GRADE 60.
5. ALL CONTINUOUS REINFORCING STEEL THAT MEETS AT A CORNER SHALL BE TIED TOGETHER WITH A CORNER BAR THAT HAS SUFFICIENT LAP DISTANCE IN EACH DIRECTION
6. CONTINUOUS REINFORCING BARS LAP LENGTH SHALL BE A MINIMUM OF 48 BAR DIAMETERS UNLESS NOTED OTHERWISE
7. CONCRETE SLUMP SHALL BE A MAXIMUM OF 4" +/- 1" (ASTM C- 143) AS DELIVERED IN THE FIELD. CONTRACTOR MAY USE CHEMICAL ADMIXTURES TO ATTAIN A MAXIMUM SLUMP OF 8" FOR WORKABILITY. NO WATER MAY BE ADDED TO THE CONCRETE MIX ON SITE UNLESS WATER IS WITHHELD AT THE BATCHING FACILITY. IF WATER IS WITHHELD AT THE BATCHING FACILITY IT SHOULD BE REFLECTED ON THE LOAD TICKET. THE TOTAL AMOUNT OF WATER IN THE MIX SHALL NOT EXCEED WHAT IS NOTED ON THE APPROVED MIXED. THIS SHALL BE NOTED IN THE SPECIAL INSPECTOR'S RECORDS.
8. CONCRETE EXPOSED TO WEATHER, VEHICLES, AND/OR DEICING CHEMICALS SHALL BE AIR-ENTRAINED WITH 6% (+/-) 1.5% ENTRAINED AIR BY VOLUME AT POINT OF DISCHARGE. DO NOT ALLOW AIR CONTENT OF TROWELED FINISHED FLOORS TO EXCEED 3%.
9. SUBMIT CONCRETE MIX PROPORTIONS PRIOR TO START OF WORK. DO NOT BEGIN CONCRETE PRODUCTION UNTIL MIXES HAVE BEEN REVIEWED AND ARE ACCEPTABLE TO THE ENGINEER.
10. READY MIX CONCRETE SHALL COMPLY WITH REQUIREMENTS OF ASTM C94.
11. CONCRETE WORK EXECUTION
    - A. CONSTRUCT FORMS TO CORRECT SIZE, SHAPE, ALIGNMENT, ELEVATION AND POSITION; AND TO SUPPORT VERTICAL AND LATERAL LOADS.
    - B. POSITION, SUPPORT, AND SECURE REINFORCEMENT AGAINST DISPLACEMENT. MINIMUM CONCRETE COVER FOR REINFORCEMENT SHALL BE, UNLESS NOTED OTHERWISE ON THE DRAWINGS:
      CAST AGAINST AND EXPOSED TO EARTH.....3 INCHES
      EXPOSED TO EARTH OR WEATHER.....2 INCHES
      NOT EXPOSED TO WEATHER OR
      IN CONTACT WITH EARTH.....1 ½ INCHES
    - C. PROVIDE CONTROL JOINTS IN SLABS-ON-GRADE AT NOT GREATER THAN 15 FEET ON CENTER IN EACH DIRECTION. SAW CUT CONTROL JOINTS MINIMUM ¼ OF SLAB DEPTH, AS SOON AFTER SLAB FINISHING WITHOUT DISLODGING AGGREGATE.
    - D. STEEL TROWEL FINISH ALL INTERIOR CONCRETE SLABS, BROOM FINISH ALL EXTERIOR CONCRETE SLABS.
    - E. CURE ALL CONCRETE IN COMPLIANCE WITH ACI 301, USING A LIQUID TYPE MEMBRANE, NON-RESIDUAL, CURING COMPOUND COMPLYING WITH ASTM C309. ASSURE COMPATIBILITY WITH FINISH FLOOR COVERING.

STRUCTURAL STEEL

1. FABRICATION AND ERECTION OF STRUCTURAL STEEL SHALL BE IN ACCORDANCE WITH THE CURRENT EDITION OF THE AISC SPECIFICATIONS FOR STRUCTURAL STEEL BUILDINGS, THE ASC CODE OF STANDARD PRACTICE FOR STEEL BUILDINGS AND BRIDGES AND CURRENT OSHA STANDARDS.
2. WIDE FLANGE SHAPES SHALL CONFORM TO ASTM A992. STRUCTURAL TUBES SHALL CONFORM TO ASTM A500 GRADE B. ALL OTHER STRUCTURAL STEEL SHALL CONFORM TO ASTM A36.
3. BOLTS, UNLESS OTHERWISE SHOWN, SHALL CONFORM TO ASTM A325-N, SIZE AS PER PLAN.
4. ANCHOR BOLTS, UNLESS OTHERWISE SHOWN, SHALL CONFORM TO ASTM F1554 GRADE 36.
5. SPLICING OF STRUCTURAL STEEL IS PROHIBITED EXCEPT AS DETAILED.
6. ALL STRUCTURAL AND MISCELLANEOUS STEEL ITEMS SHALL RECEIVE ONE COAT OF "IRONCLAD RETARDO RUST INHIBITIVE PAINT 163" (BENJAMIN MOORE) OR APPROVED EQUAL UNLESS OTHERWISE INDICATED IN THE SPECIFICATIONS. ALL STEEL SURFACES EMBEDDED IN CONCRETE SHALL NOT BE PAINTED. PREPARATION OF STEEL SURFACES SHALL MEET THE REQUIREMENTS OF THE STEEL STRUCTURES PAINTING COUNCIL (SSPC-SP1) AND THE REMOVAL OF GREASE AND OIL BY SOLVENT CLEANING (SSPC-SP1) AND THE REMOVAL OF MILL SCALE, RUST, WELD FLUX AND SLAG BY HAND TOOL CLEANING (SSPC-SP2). PRIMER SHALL BE APPLIED AT THE MANUFACTURER'S RECOMMENDED RATE BUT NOT LESS THAN ONE GALLON PER 400 SQ.FT. THEREBY DEPOSITING A DRY FILM THICKNESS OF NOT LESS THAN 1.5 MILS. ANY SCARRED AREAS SHALL BE TOUCHED UP WITH THE SAME PAINT AFTER ERECTION.
7. ALL WELDING SHALL BE DONE BY QUALIFIED WELDERS IN ACCORDANCE WITH THE CURRENT EDITION OF THE AWS STRUCTURAL WELDING CODE. WELDING ELECTRODES SHALL BE E70XX.

TIMBER

TIMBER WORK SHALL CONFORM TO ALL REQUIREMENTS OF THE CURRENT ANSI/AWC NATIONAL DESIGN SPECIFICATION (NDS) FOR WOOD CONSTRUCTION WITH 2015 NDS SUPPLEMENT FOR WOOD CONSTRUCTION, WITH THE FOLLOWING SUPPLEMENTAL REQUIREMENTS:

1. FOR COMMON MEMBER SIZES, THE SPECIES AND GRADES SHALL BE AS FOLLOWS, UNLESS NOTED OTHERWISE:
   - A. 2X4 SPF No.1/No.2
   - B. 2X6 SPF No.1/No.2
   - C. 2X8 DF-L No.2
   - D. 2X10 DF-L S.S.
   - E. 2X12 DF-L S.S.

   EQUIVALENT (OR BETTER) GRADES & SPECIES MAY BE SUBMITTED FOR THE ENGINEER'S APPROVAL.
2. SIZES SHOWN FOR LUMBER ARE NOMINAL SIZES.
3. TIMBER EXPOSED TO WEATHER OR GROUND, OR IN CONTACT WITH CONCRETE OR MASONRY SHALL BE PRESSURE-IMPREGNATED BY AN APPROVED PROCESS AND PRESERVATIVE.
4. SPLICING OF JOISTS, STUDS, OR HEADERS IS PROHIBITED EXCEPT AS SHOWN.
5. BOLTS SHALL CONFORM TO ASTM A307. HOLES SHALL BE DRILLED PER SECTION 12.1.3 OF THE 2015 ANSI/AWC NDS FOR WOOD CONSTRUCTION NDS SUPPLEMENT.
6. LAG SCREWS AND WOOD SCREWS SHALL BE INSTALLED PER SECTIONS 12.1.4 & 12.1.5 RESPECTIVELY, OF THE 2015 ANSI/AWC NDS FOR WOOD CONSTRUCTION WITH 2015 NDS SUPPLEMENT.
7. COMMON NAILS SHALL BE USED, UNLESS NOTED OTHERWISE. IN ADDITION, NAILS SHALL BE GALVANIZED, IF EXPOSED TO WEATHER OR MOISTURE. TOE-NAILS SHALL BE DRIVEN PER SECTION 12.1.6.3 OF THE 2015 ANSI/AWC NDS FOR WOOD CONSTRUCTION WITH 2015 NDS SUPPLEMENT.
8. FASTENING SHALL BE PER THE IBC MINIMUM FASTENING SCHEDULE, TABLE 2304.10.1, UNLESS NOTED OTHERWISE.
9. CONNECTIONS/CONNECTORS SHALL BE INSTALLED PER MANUFACTURER'S SPECIFICATIONS.

PREFABRICATED WOOD TRUSSES

1. FLOOR & ROOF TRUSSES SHALL BE DESIGNED IN ACCORDANCE WITH THE TRUSS PLATE INSTITUTE (TPI) DESIGN SPECIFICATION FOR METAL PLATE CONNECTED WOOD TRUSSES, AND THE ANSI/NF&PA NATIONAL DESIGN SPECIFICATION (NDS) FOR WOOD CONSTRUCTION.
2. PROVIDE TEMPORARY AND PERMANENT BRACING ON ALL TRUSSES, AS REQUIRED TO PROVIDE MEMBER AND TRUSS STABILITY.
3. FLOOR & ROOF TRUSSES SHALL BE DESIGNED AND CONSTRUCTED FOR A MAXIMUM TOTAL LOAD DEFLECTION OF L/360 AND TO SAFELY SUPPORT THE FOLLOWING LOADS:
   - A. DEAD, LIVE, SNOW, WIND, EARTHQUAKE: SEE PROJECT DESIGN DATA ON COVER SHEET.
   - B. MECHANICAL PIPE LOAD: TRUSSES SHALL BE DESIGNED FOR A CONCENTRATED LOAD OF 250 LBS HUNG ANYWHERE ALONG THE BOTTOM CHORD.
   - C. OVER-FRAMING LOAD: TRUSSES SHALL ALSO BE DESIGNED TO SUPPORT ADDITIONAL OVERBUILD FRAMING, SUCH AS THAT WHICH FORMS VALLEYS AND HIPS ON ROOFS.
   - D. DRIFTED SNOW LOAD: TRUSSES SHALL BE DESIGNED TO SUPPORT DRIFTED SNOW LOADS IN ACCORDANCE WITH THE APPROPRIATE BUILDING CODE.
   - E. IN-PLANE LATERAL LOADS: TRUSSES SHALL BE DESIGNED TO SUPPORT ANY LATERAL LOADS CARRIED AXIALLY IN THE PLANE OF THE TRUSS, AS SHOWN ON THE PLANS.
4. GABLED END TRUSSES SHALL HAVE VERTICAL MEMBERS SPACED AT 16" O.C. MAXIMUM.
5. SUBMITTALS SHALL INCLUDE THE FOLLOWING:
   - A. SHOP DRAWINGS PREPARED UNDER THE SUPERVISION OF, AND SIGNED AND SEALED BY, A PROFESSIONAL ENGINEER REGISTERED IN THE STATE WHERE THE PROJECT IS BUILT. THESE DRAWINGS SHALL INDICATE SPECIES, GRADE, AND SIZES OF LUMBER TO BE USED; PITCH, SPAN, CAMBER, CONFIGURATION, AND SPACING FOR EACH TYPE OF TRUSS REQUIRED; TYPE, SIZE, MATERIAL, FINISH, AND LOCATION OF METAL CONNECTOR PLATES; AND BEARING DETAILS. SHOW TRUSS LAYOUT AND ALL REQUIRED TEMPORARY AND PERMANENT BRACING AFFECTING THE STRUCTURAL CAPACITY OF THE TRUSSES.

PROVIDE COMPLETE ENGINEERING DESIGN CALCULATIONS THAT INCLUDE DESIGN VALUES, DESIGN ANALYSIS INDICATING LOADING, ASSUMED ALLOWABLE STRESSES, STRESS DIAGRAMS, AND CALCULATIONS, AND ANY OTHER INFORMATION NEEDED FOR REVIEW. THE CALCULATIONS SHALL HAVE BEEN SIGNED AND SEALED BY A QUALIFIED PROFESSIONAL ENGINEER WHO IS REGISTERED IN THE STATE WHERE THE PROJECT IS BUILT AND WHO IS RESPONSIBLE FOR PREPARATION OF THE CALCULATIONS.

SPECIAL INSPECTIONS

THE FOLLOWING ITEMS REQUIRE SPECIAL INSPECTION IN ACCORDANCE WITH CHAPTER 17 OF THE INTERNATIONAL BUILDING CODE.

- a. CONCRETE GROUT DESIGN MIX (PERIODIC)
- b. PLACING OF CONCRETE AND REINFORCING STEEL (CONTINUOUS OF CONCRETE SAMPLING / PERIODIC OF REINFORCING)
- c. BOLTS & ANCHORS EMBEDDED IN CONCRETE (PERIODIC)
- d. STRUCTURAL STEEL FABRICATIONS (UNLESS AISC APPROVED) (PERIODIC)
- e. STRUCTURAL STEEL BOLTING & WELDING (PERIODIC)
- f. POST INSTALLED ANCHORS IN CONCRETE (CONTINUOUS)
- g. IN-SITU SOILS, EXCAVATIONS, FILLING & COMPACTION (PERIODIC)
- h. WOOD FRAMING:
  - h.a. SHEAR WALLS; WALL SIZE, CONFIGURATION, BLOCKING, PANEL GRADE, PANEL THICKNESS, AND FASTENING. (PERIODIC)
  - h.b. DIAPHRAGMS (FLOOR AND ROOF SHEATHING); SIZE, CONFIGURATION, BLOCKING, PANEL GRADE, PANEL THICKNESS, AND FASTENING. (PERIODIC)
  - h.c. FRAMING MEMBERS AND DETAILS (PERIODIC)
  - h.d. MATERIAL GRADE (PERIODIC)
  - h.e. CONNECTIONS; HANGERS, HOLD DOWNS, BUILT-UP COLUMNS, BUILT-UP BEAMS (PERIODIC)
  - h.f. PRE-ENGINEERED TRUSSES; FRAMING, CONNECTIONS, BRIDGING (PERIODIC)

THE CONTRACTOR SHALL REQUEST SPECIAL INSPECTION OF THE ITEMS LISTED ABOVE PRIOR TO THOSE ITEMS BECOMING INACCESSIBLE AND UNOBSERVABLE DUE TO PROGRESSION OF THE WORK.

DESIGN DATA

2015 INTERNATIONAL BUILDING CODE / ASCE 7-10

BUILDING OCCUPANCY CATEGORY	II
ROOF LOAD DATA	
LIVE LOAD	20
5/8" OSB ROOF SHEATHING, ROOFING, & INSULATION	10.0
PRE-ENGINEERED WOOD TRUSSES @ 2'-0" O.C.	3.0
MECHANICAL ALLOWANCE	5.0
5/8" GYP. CEILING	2.0
SOLAR	5.0
TOTAL TO TRUSSES	45 lbs/sq.ft

ROOF SNOW LOAD DATA* (*UNBALANCED & DRIFTING SNOW TO BE DETERMINED IN ADDITION TO UNIFORM LOAD, WHERE APPLICABLE)

p_g =	20 lbs/sq.ft
C_e =	1.0
I_s =	1.0
C_t =	1.0
p_f =	14.00 lbs/sq.ft

WIND DESIGN DATA	
V_{ult} =	115 M.P.H. (3-SECOND GUST)
RISK CATEGORY	II
EXPOSURE	C
INTERNAL PRESSURE COEFFICIENT =	± 0.18
DIRECTIONAL PROCEDURE (MWFRS - ASCE 7-10, CH 27; C&C - ASCE 7-10, CH 30, PART 4)	
MAXIMUM COMPONENTS & CLADDING WIND	+/-37.4 lbs/sq.ft
EARTHQUAKE DESIGN DATA	
RISK CATEGORY	II
I_E =	1.0
S_{DS} =	0.31
S_{D1} =	0.137
SITE CLASS	C
S_{DS} =	0.247
S_{D1} =	0.151
SEISMIC DESIGN CATEGORY	C
BASIC SEISMIC-FORCE-RESISTING SYSTEM = LIGHT-FRAME (WOOD) WALLS SHEATHED WITH WOOD STRUCTURAL PANELS RATED FOR SHEAR RESISTANCE / STEEL INTERMEDIATE MOMENT FRAMES	
R =	6.5/4.5
Ω_0 =	3.0/3.0
C_d =	4.0/4.0
DESIGN BASE SHEAR	$V = 0.038W/0.055W$
EQUIVALENT LATERAL FORCE PROCEDURE	
NET ALLOWABLE SOIL BEARING	2,000 lbs/sq.ft

INDEX OF SHEETS

COVER / GENERAL STRUCTURAL DATA	S100
FOUNDATION PLAN	S200
FOUNDATION DETAILS	S210 - S212
FRAMING PLAN	S300
FRAMING DETAILS	S310 - S312

REVISIONS:

No.	Date
PERMIT SET	03/17/2023

THIS SHEET HAS BEEN SIGNED, SEALED AND DATED ELECTRONICALLY

STATE OF MISSOURI
GREGORY L. LINNEMAN
NUMBER PE-2005001013
3/17/23

GREGORY L. LINNEMAN - PE
MO LICENSE - 2005001013

STRUCTURAL ENGINEER:
CROCKETT
ENGINEERING CONSULTANTS
1103 Vandiver Drive, Suite 1
Columbia, Missouri 65202
(573) 447-0292
www.crockettengineering.com
Crockett Engineering Consultants, LLC
Missouri Certificate of Authority
#2000015501

CLIENT:
BAALMAN ARCHITECTS
17 DANIEL DRIVE
O' FALLON, MISSOURI

HAWK RIDGE DENTAL CARE
8625 HWY N
LAKE SAINT LOUIS, ST. CHARLES COUNTY, MISSOURI

DRAWING INCLUDES:
GENERAL STRUCTURAL DATA

DESIGNED:	GLL
DRAWN:	TGC
PROJECT NO.:	230010
SHEET:	S100

NOTE:
ALL DIMENSIONS ARE FROM FACE OF FOUNDATION WALL OR FRAMING; EDGE OF SLAB OR TRUSS/RAFTER; OR CENTERLINE OF COLUMN, BEAM, OR JOIST UNLESS NOTED OTHERWISE.

FOUNDATION NOTES

1. REENTRANT CORNER BARS, REFER TO TYPICAL CRACK CONTROL REINFORCING DETAIL S210.

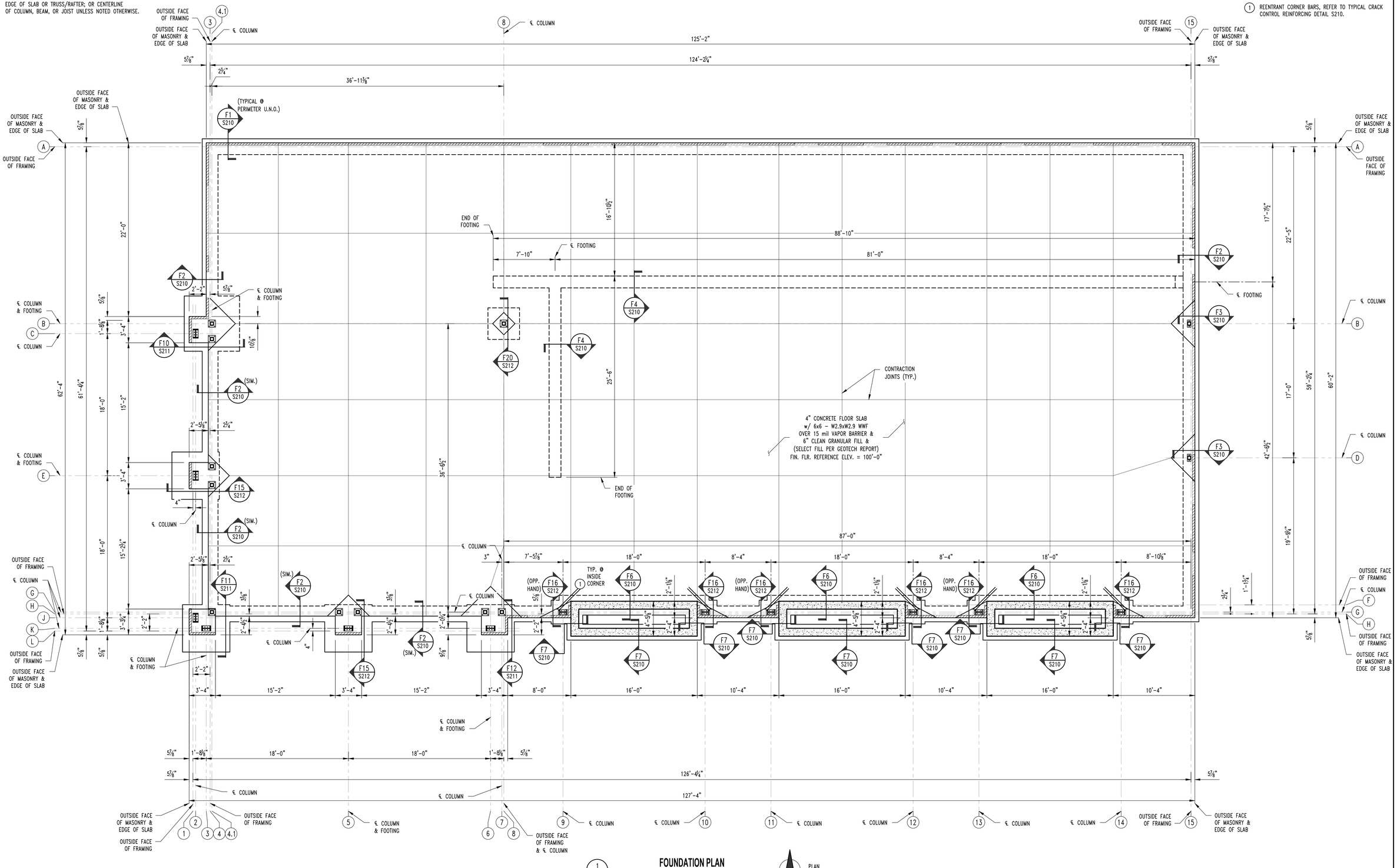

FOUNDATION PLAN
1 / S200
SCALE: 3/16" = 1'-0"

PLAN NORTH

REVISIONS:

No.	Date
PERMIT SET	03/17/2023

THIS SHEET HAS BEEN SIGNED, SEALED AND DATED ELECTRONICALLY
STATE OF MISSOURI
GREGORY L. LINNEMAN
NUMBER PE-2005001013
3/17/23
GREGORY L. LINNEMAN - PE
MO LICENSE - 2005001013

STRUCTURAL ENGINEER:
CROCKETT ENGINEERING CONSULTANTS
1000 W. Nifong Blvd. Bldg. 1
Columbia, Missouri 65203
(573) 447-0292
www.crockettengineering.com
Crockett Engineering Consultants, LLC
Missouri Certificate of Authority
#2000015501

CLIENT:
BAALMAN ARCHITECTS
#2 DANIEL DRIVE
O' FALLON, MISSOURI

HAWK RIDGE DENTAL CARE

8625 HWY N
LAKE SAINT LOUIS, ST. CHARLES COUNTY, MISSOURI

DRAWING INCLUDES:
FOUNDATION PLAN

DESIGNED:	GLL
DRAWN:	TGC
PROJECT NO.:	230010
SHEET:	S200

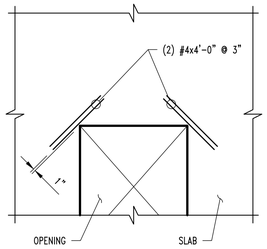

NOTE:
TYPICAL AT ALL REENTRANT CORNERS FOR SLAB-ON-GRADE & STRUCTURAL SLAB. REINFORCING TO BE CENTERED IN SLAB THICKNESS.

CRACK CONTROL REINFORCING

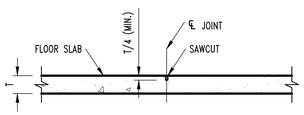

CONTRACTION JOINT

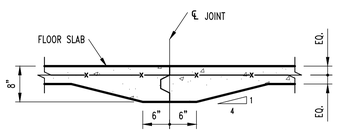

CONSTRUCTION JOINT

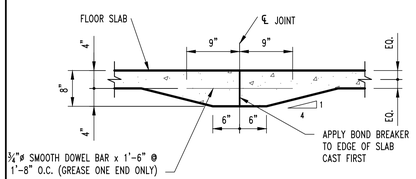

CONSTRUCTION JOINT

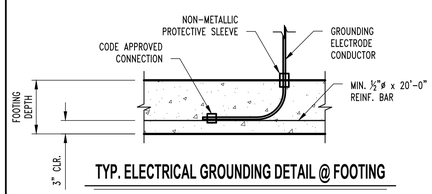

TYP. ELECTRICAL GROUNDING DETAIL @ FOOTING

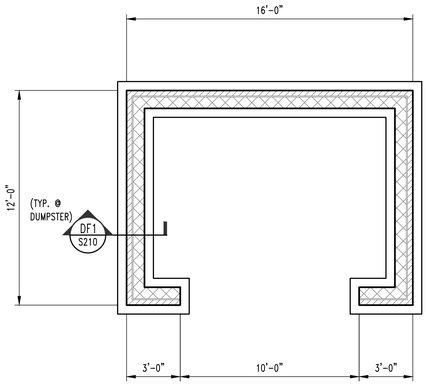

1 / S210 **DUMPSTER FOUNDATION PLAN**
SCALE: ¼" = 1'-0"

PLAN NORTH

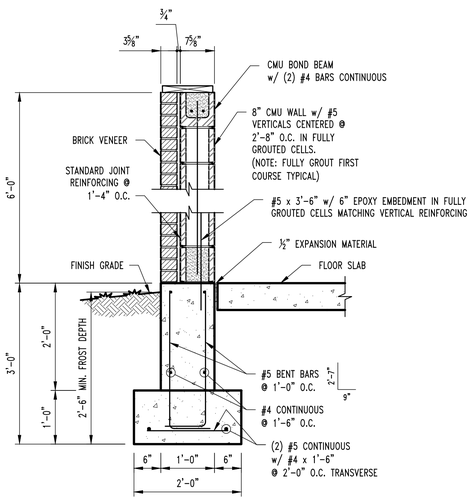

DF1 / S210 **DUMPSTER WALL SECTION**
SCALE: ¾" = 1'-0"

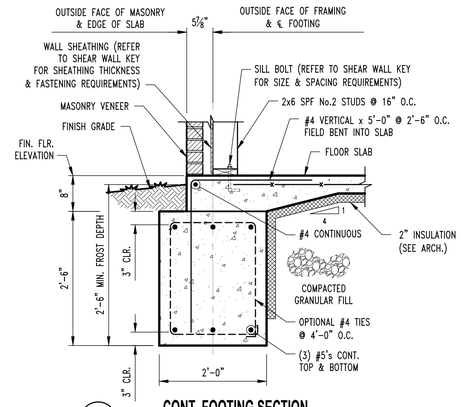

F1 / S200 **CONT. FOOTING SECTION**
SCALE: ¾" = 1'-0"

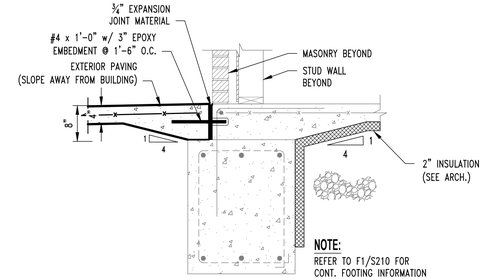

NOTE:
REFER TO F1/S210 FOR CONT. FOOTING INFORMATION

F2 / S200 **FOOTING SECTION @ THRESHOLD**
SCALE: ¾" = 1'-0"

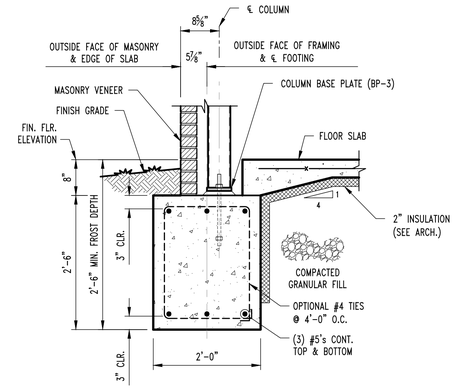

F3 / S200 **CONT. FOOTING SECTION**
SCALE: ¾" = 1'-0"

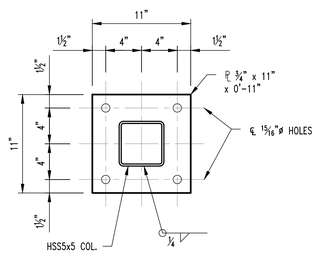

BASE PLATE (BP-1)

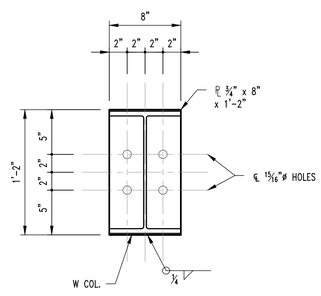

BASE PLATE (BP-2)

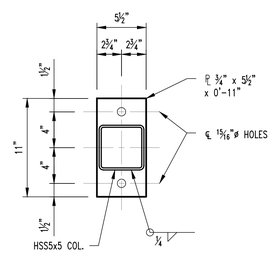

BASE PLATE (BP-3)

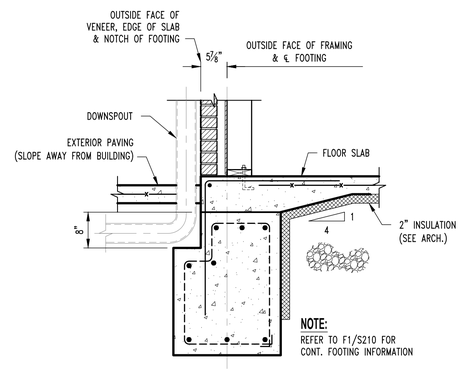

NOTE:
REFER TO F1/S210 FOR CONT. FOOTING INFORMATION

TYP. CONT. FOOTING SECTION @ DOWNSPOUT

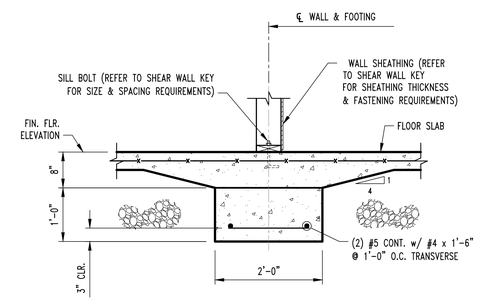

F4 / S200 **CONT. INTERIOR FOOTING SECTION**
SCALE: ¾" = 1'-0"

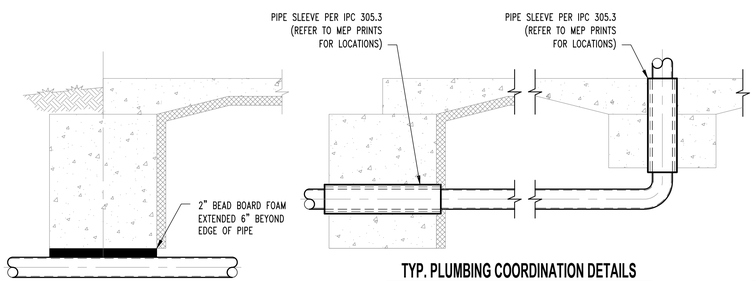

TYP. PLUMBING COORDINATION DETAILS

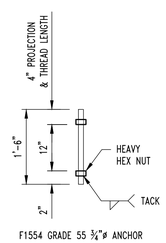

ANCHOR BOLT DETAIL (TYPE A)

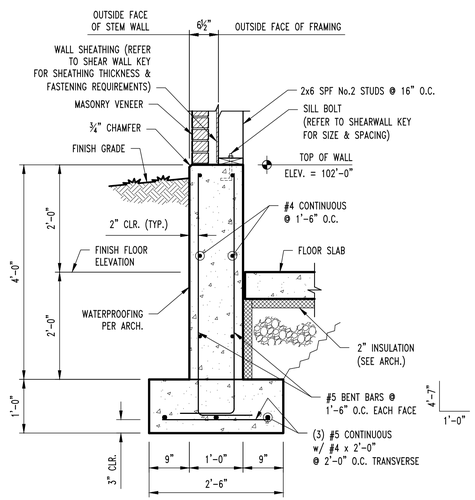

F6 / S200 **STEM WALL SECTION**
SCALE: ¾" = 1'-0"

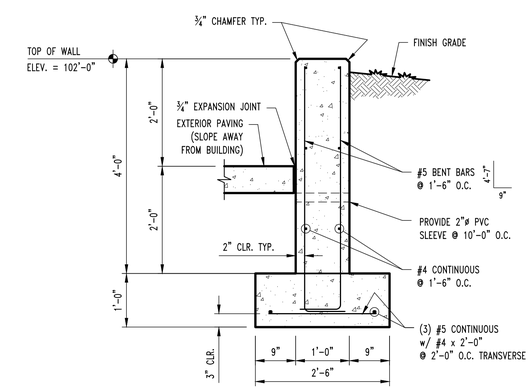

F7 / S200 **FRONT BENCH SECTION**
SCALE: ¾" = 1'-0"

REVISIONS:

No.	Date
PERMIT SET	03/17/2023

THIS SHEET HAS BEEN SIGNED, SEALED AND DATED ELECTRONICALLY

STATE OF MISSOURI — GREGORY L. LINNEMAN — NUMBER PE-2005001013 — 3/17/23

GREGORY L. LINNEMAN - PE
MO LICENSE - 2005001013

STRUCTURAL ENGINEER:
CROCKETT ENGINEERING CONSULTANTS
1000 W. Nifong, Bldg. 7, Suite 1
Columbia, Missouri 65203
(573) 447-0292
www.crockettengineering.com
Crockett Engineering Consultants, LLC
Missouri Certificate of Authority
#2006015501

CLIENT:
BAALMAN ARCHITECTS
12 DANIEL DRIVE
O' FALLON, MISSOURI

HAWK RIDGE DENTAL CARE

8625 HWY N
LAKE SAINT LOUIS, ST. CHARLES COUNTY, MISSOURI

DRAWING INCLUDES:
FOUNDATION DETAILS

DESIGNED:	GLL
DRAWN:	TGC
PROJECT NO.:	230010
SHEET:	S210

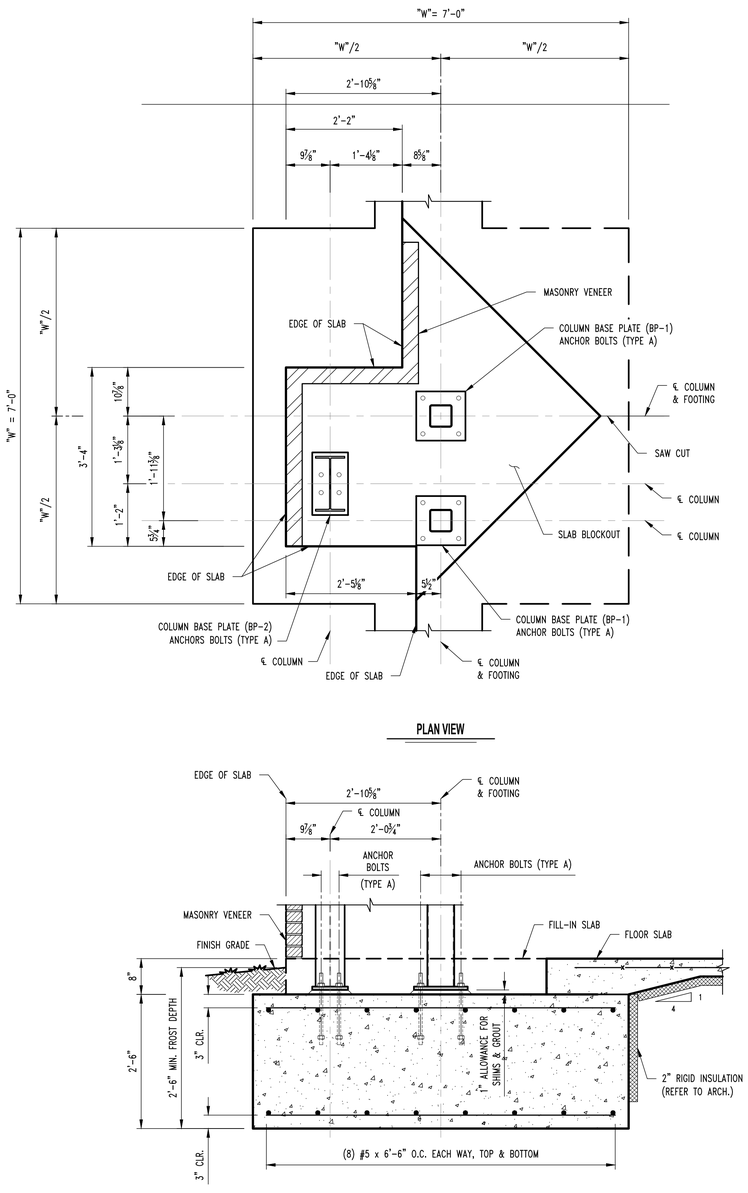

F10 S200 **COLUMN FOOTING SECTION**

SCALE: ¾" = 1'-0"

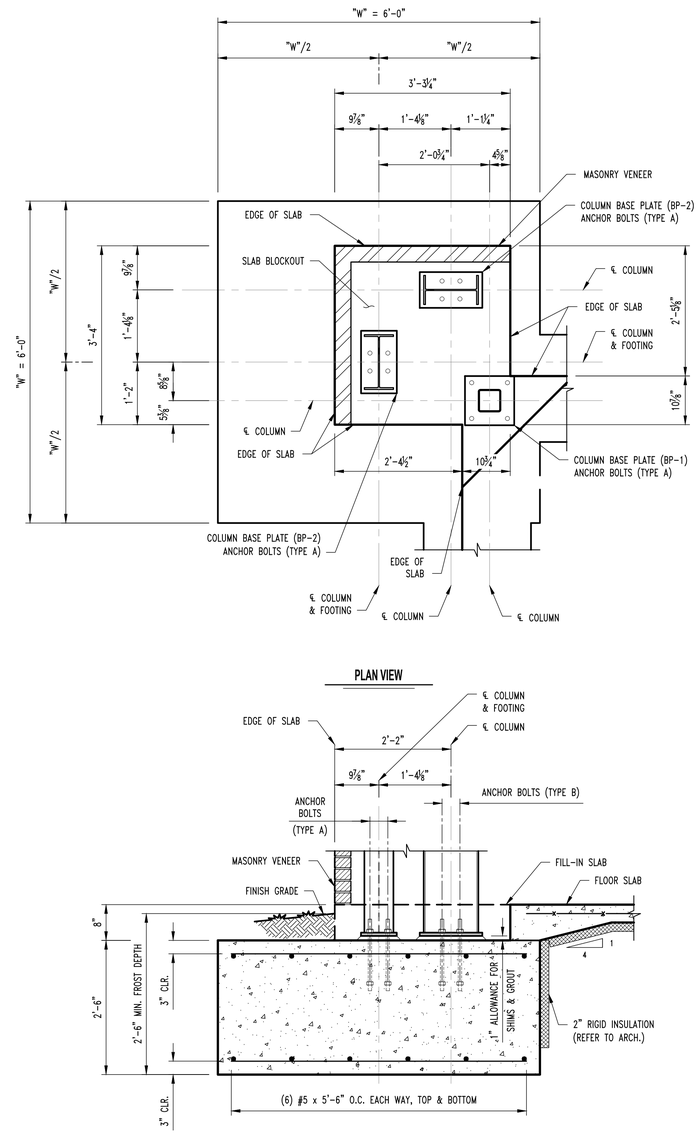

F11 S200 **COLUMN FOOTING SECTION**

SCALE: ¾" = 1'-0"

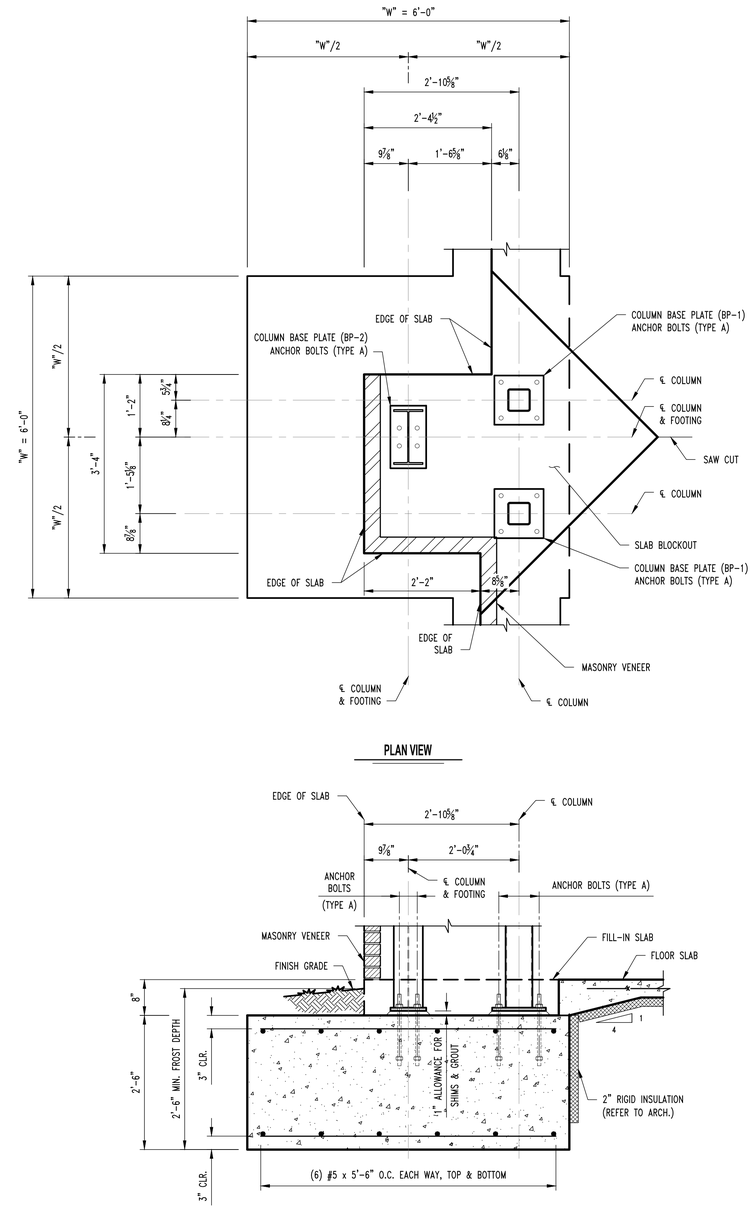

F12 S200 **COLUMN FOOTING SECTION**

SCALE: ¾" = 1'-0"

REVISIONS:

No.	Date
PERMIT SET	03/17/2023

THIS SHEET HAS BEEN SIGNED, SEALED AND DATED ELECTRONICALLY

STATE OF MISSOURI
GREGORY L. LINNEMAN
NUMBER PE-2005001013
3/17/23

GREGORY L. LINNEMAN - PE
MO LICENSE - 2005001013

STRUCTURAL ENGINEER:

CROCKETT
ENGINEERING CONSULTANTS
1000 W. Nifong Blvd. Bldg. 1
Columbia, Missouri 65203
(573) 447-0292
www.crockettengineering.com
Crockett Engineering Consultants, LLC
Missouri Certificate of Authority
#2006019501

CLIENT:

BAALMAN ARCHITECTS
6F2 DANIEL DRIVE
O'FALLON, MISSOURI

HAWK RIDGE DENTAL CARE

8625 HWY N
LAKE SAINT LOUIS, ST. CHARLES COUNTY, MISSOURI

DRAWING INCLUDES:

FOUNDATION DETAILS

DESIGNED:	GLL
DRAWN:	TGC
PROJECT NO.:	230010

SHEET:

S211

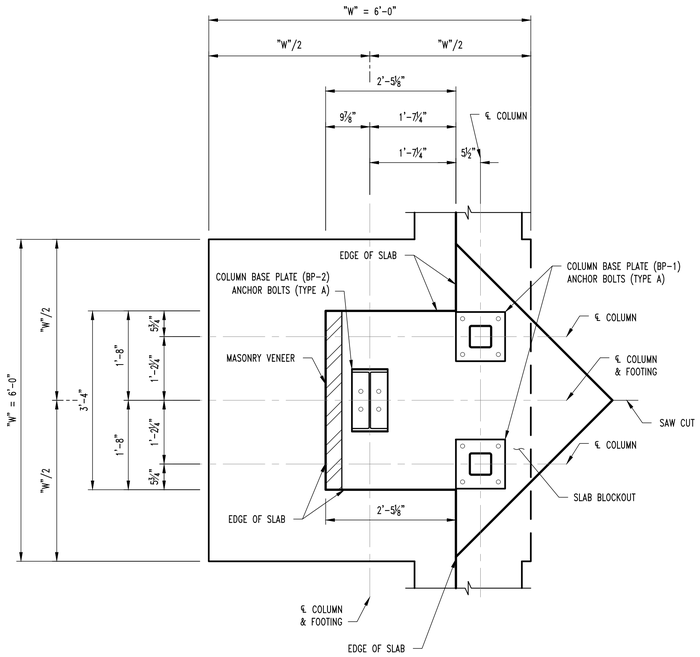

PLAN VIEW

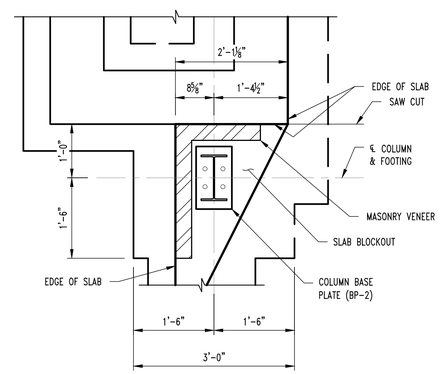

PLAN VIEW

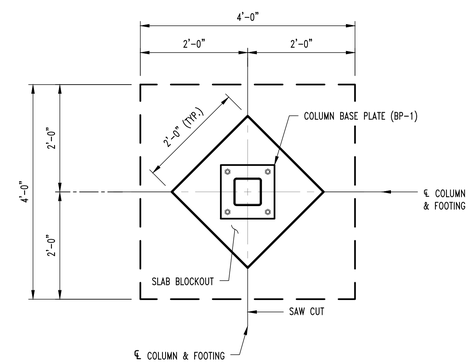

PLAN VIEW

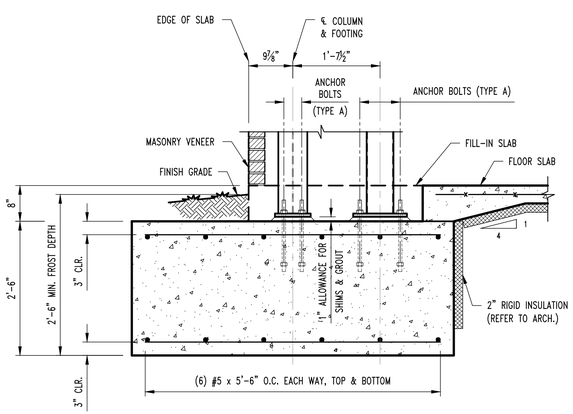

F15 S200 **COLUMN FOOTING SECTION**

SCALE: ¾" = 1'-0"

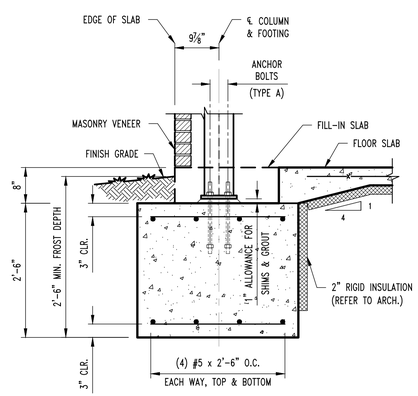

F16 S200 **COLUMN FOOTING SECTION**

SCALE: ¾" = 1'-0"

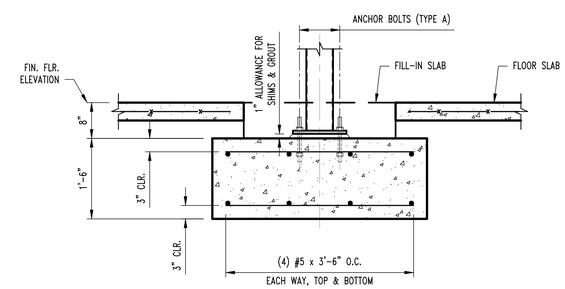

F20 S200 **COLUMN FOOTING SECTION**

SCALE: ¾" = 1'-0"

REVISIONS:

No.	Date
PERMIT SET	03/17/2023

THIS SHEET HAS BEEN SIGNED, SEALED AND DATED ELECTRONICALLY

STATE OF MISSOURI
GREGORY L. LINNEMAN
NUMBER
PE-2005001013
3/17/23

GREGORY L LINNEMAN - PE
MO LICENSE - 2005001013

STRUCTURAL ENGINEER:

CROCKETT
ENGINEERING CONSULTANTS
1000 W. Nifong Blvd. Bldg. 1
Columbia, Missouri 65203
(573) 447-0292
www.crockettengineering.com
Crockett Engineering Consultants, LLC
Missouri Certificate of Authority
#2006015501

CLIENT:

BAALMAN
ARCHITECTS
#2 DANIEL DRIVE
O' FALLON, MISSOURI

HAWK RIDGE DENTAL CARE

8625 HWY N
LAKE SAINT LOUIS, ST. CHARLES COUNTY, MISSOURI

DRAWING INCLUDES:

FOUNDATION
DETAILS

DESIGNED:	GLL
DRAWN:	TGC
PROJECT NO.:	230010

SHEET:

S212

NOTE:
ALL DIMENSIONS ARE FROM FACE OF FOUNDATION WALL OR FRAMING; EDGE OF SLAB OR TRUSS/RAFTER; OR CENTERLINE OF COLUMN, BEAM, OR JOIST UNLESS NOTED OTHERWISE.

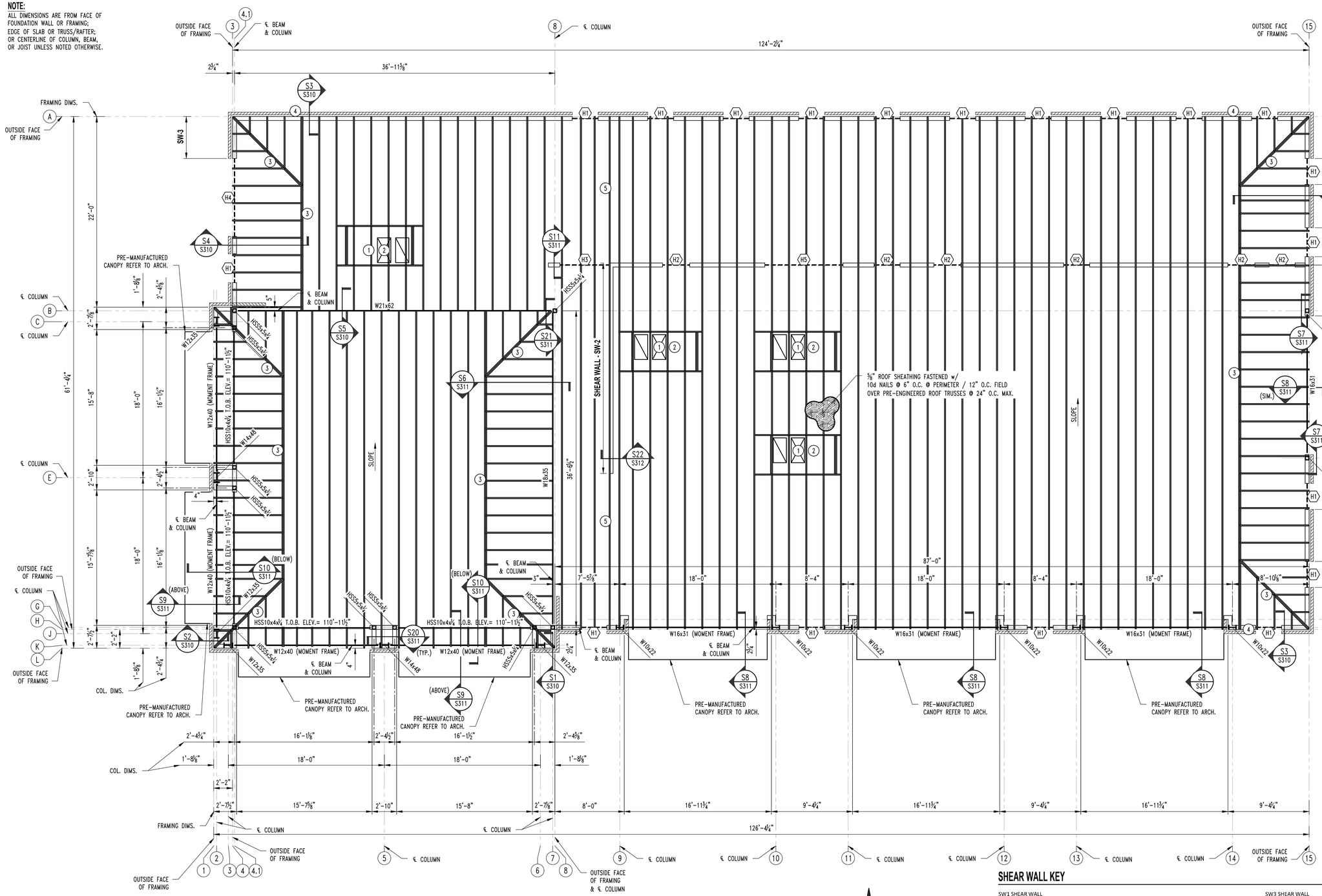

ROOF FRAMING NOTES

1. RTU, REFER TO MEP DRAWINGS FOR SPECIFIC DIMENSIONS & LOADING.
2. PROVIDE TRUSS SUPPORT & PERIMETER CURB.
3. GIRDER TRUSS
4. INSTALL 3-PLY STUD BENEATH GIRDER TRUSS w/ SIMPSON LTTP2 HOLDDOWN @ THE BASE FASTENED w/ (12) 10d NAILS TO STUDS & ⅝"ø A307 THREADED ROD w/ 14" EPOXY EMBEDMENT.
5. PROVIDE TRUSS w/ VERTICALS @ 24" O.C. ALIGN w/ FACE OF SHEAR WALL. EXTEND SHEATHING & FASTENING TO UNDERSIDE OF ROOF.

FRAMING PLAN

1 / S300

SCALE: 3/16" = 1'-0"

PLAN NORTH

LINTEL SCHEDULE

LENGTH OF SPAN	MEMBER SIZE (GALVANIZED)
4'-0" & LESS	L4x4x1/4 WITH 6" BEARING EACH END
6'-6" & LESS	L6x4x3/8 (LLV) WITH 6" BEARING EACH END
8'-0" & LESS	L8x4x7/16 (LLV) WITH 6" BEARING EACH END
12'-0" & LESS	L8x4x5/8 (LLV) WITH 12" BEARING EACH END

HEADER SCHEDULE

LABEL	HEADER	CRIPPLE/JACK	JAMB/KING
"H1"	2 Ply 2x6 SPF #2	Single Ply 2x6 SPF #2	2 Ply 2x6 SPF #2
"H2"	2 Ply 2x8 Doug Fir #2	Single Ply 2x6 SPF #2	Single Ply 2x6 SPF #2
"H3"	2 Ply 2x10 Doug Fir Sel. Struct	2 Ply 2x6 SPF #2	Single Ply 2x6 SPF #2
"H4"	2 Ply 2x12 Doug Fir Sel. Struct	2 Ply 2x6 SPF #2	4 Ply 2x6 SPF #2

SHEAR WALL KEY

SW1 SHEAR WALL

- 7/16" OSB SHEATHING FASTENED WITH 8D NAILS @ 4" O.C. @ PERIMETER / 12" O.C. FIELD
- 1/2" DIAMETER F1554 GRADE 36 STANDARD "J" BOLTS W/ 7" EMBEDMENT @ 1'-6" O.C.
- REQUIRES SIMPSON HTT4 HOLDOWN FASTENED TO 2-PLY STUDS W/ 5/8" DIAMETER A307 THREADED ROD W/ 16" TOTAL (8" INTO FOOTING) SIMPSON "AT-XP" EPOXY EMBEDMENT AT EACH END OF THE SHEAR WALL

SW2 SHEAR WALL

- 7/16" OSB SHEATHING FASTENED WITH 8D NAILS @ 2" O.C. @ PERIMETER / 12" O.C. FIELD (**NOTE:** THIS SHEET FASTENING PATTERN REQUIRES 3X OR DOUBLE 2X FRAMING MEMBERS WHERE SHEETS MEET)
- 1/2" DIAMETER F1554 GRADE 36 STANDARD "J" BOLTS W/ 7" EMBEDMENT @ 1'-0" O.C.
- REQUIRES SIMPSON HDU11-SDS2.5 HOLDOWN FASTENED TO 3-PLY STUDS W/ 1" DIAMETER A307 THREADED ROD W/ HEAVY HEX NUT AND 20" TOTAL (12" INTO FOOTING) SIMPSON "AT-XP" EPOXY EMBEDMENT AT EACH END OF THE SHEAR WALL

SW3 SHEAR WALL

- 2 SIDES 7/16" OSB SHEATHING FASTENED WITH 8D NAILS @ 2" O.C. @ PERIMETER / 12" O.C. FIELD (**NOTE:** THIS SHEET FASTENING PATTERN REQUIRES 3X OR DOUBLE 2X FRAMING MEMBERS WHERE SHEETS MEET)
- 1/2" DIAMETER F1554 GRADE 36 STANDARD "J" BOLTS W/ 7" EMBEDMENT @ 0'-6" O.C.
- REQUIRES SIMPSON HD19 HOLDOWN FASTENED TO 4-PLY STUDS W/ 1 1/8" DIAMETER A307 THREADED ROD W/ HEAVY HEX NUT AND 20" TOTAL (12" INTO FOOTING) SIMPSON "AT-XP" EPOXY EMBEDMENT AT EACH END OF THE SHEAR WALL

TYPICAL WALL UNLESS NOTED

- 7/16" STRUCTURAL I SHEATHING FASTENED WITH 8D NAILS @ 4" O.C. @ PERIMETER / 12" O.C. FIELD
- 1/2" DIAMETER F1554 GRADE 36 STANDARD "J" BOLTS W/ 7" EMBEDMENT @ 3'-0" O.C.
- NO HOLDDOWNS REQUIRED

REVISIONS:

No.	Date
PERMIT SET	03/17/2023

THIS SHEET HAS BEEN SIGNED, SEALED AND DATED ELECTRONICALLY

STATE OF MISSOURI — GREGORY L. LINNEMAN — NUMBER PE-2005001013 — 3/17/23

GREGORY L LINNEMAN - PE
MO LICENSE - 2005001013

STRUCTURAL ENGINEER:
CROCKETT
ENGINEERING CONSULTANTS
1000 W. Nifong Blvd. Bldg. 1
Columbia, Missouri 65203
(573) 447-0292
www.crockettengineering.com
Crockett Engineering Consultants, LLC
Missouri Certificate of Authority
#2006015501

CLIENT:
BAALMAN ARCHITECTS
6" DANIEL DRIVE
O' FALLON, MISSOURI

HAWK RIDGE DENTAL CARE

8625 HWY N
LAKE SAINT LOUIS, ST. CHARLES COUNTY, MISSOURI

DRAWING INCLUDES:
FRAMING PLAN

DESIGNED:	GLL
DRAWN:	TGC
PROJECT NO.:	230010
SHEET:	S300

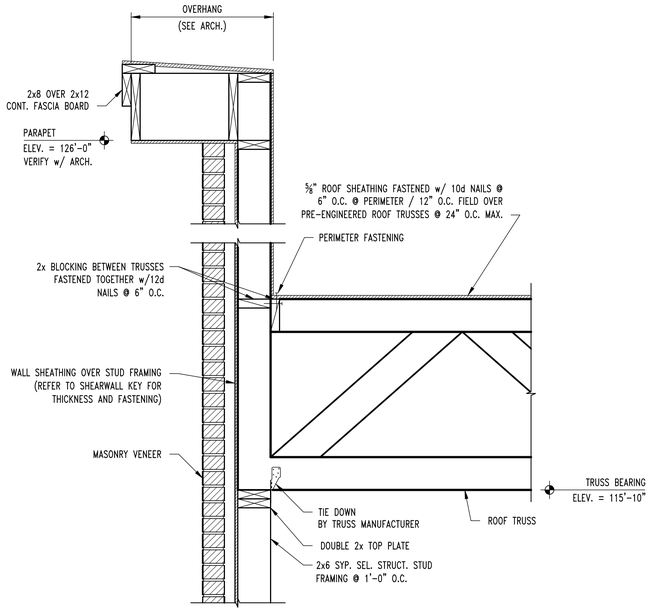

S1 / S300 **ROOF FRAMING SECTION**
SCALE: 1" = 1'-0"

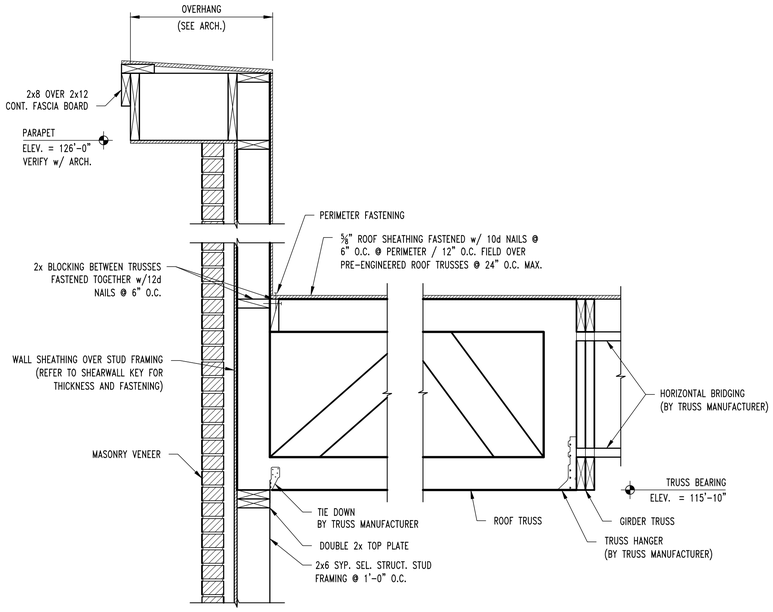

S2 / S300 **ROOF FRAMING SECTION**
SCALE: 1" = 1'-0"

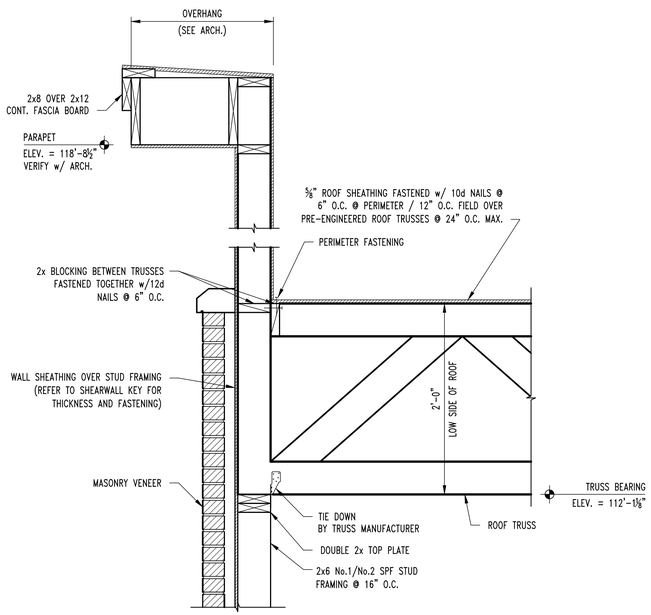

S3 / S300 **ROOF FRAMING SECTION**
SCALE: 1" = 1'-0"

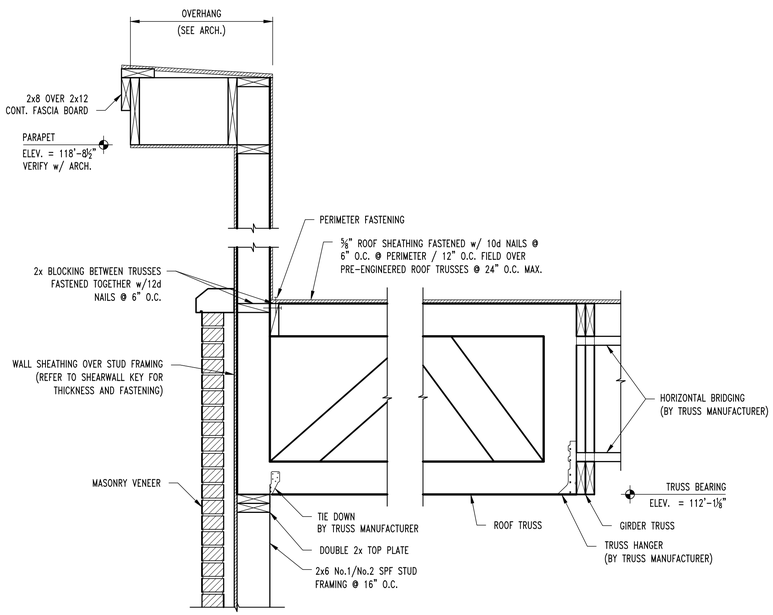

S4 / S300 **ROOF FRAMING SECTION**
SCALE: 1" = 1'-0"

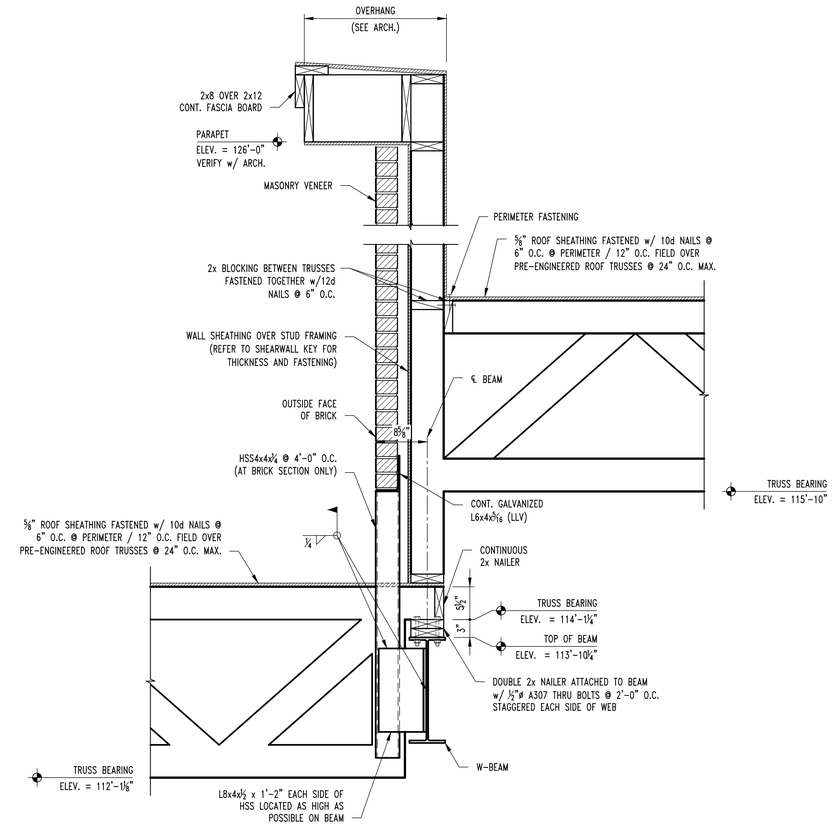

S5 / S300 **ROOF FRAMING SECTION**
SCALE: 1" = 1'-0"

REVISIONS:

No.	Date
PERMIT SET	03/17/2023

THIS SHEET HAS BEEN SIGNED, SEALED AND DATED ELECTRONICALLY

STATE OF MISSOURI
GREGORY L. LINNEMAN
NUMBER
PE-2005001013
3/17/23

GREGORY L LINNEMAN - PE
MO LICENSE - 2005001013

STRUCTURAL ENGINEER:
CROCKETT
ENGINEERING CONSULTANTS
1020 Vandiver Drive, Suite 1
Columbia, Missouri 65202
(573) 447-0292
www.crockettengineering.com
Crockett Engineering Consultants, LLC
Missouri Certificate of Authority
#2006015501

CLIENT:
BAALMAN
ARCHITECTS
6" FALLON DRIVE
O' FALLON, MISSOURI

HAWK RIDGE DENTAL CARE

8625 HWY N
LAKE SAINT LOUIS, ST. CHARLES COUNTY, MISSOURI

DRAWING INCLUDES:
FRAMING
DETAILS

DESIGNED:	GLL
DRAWN:	TGC
PROJECT NO.:	230010

SHEET:
S310

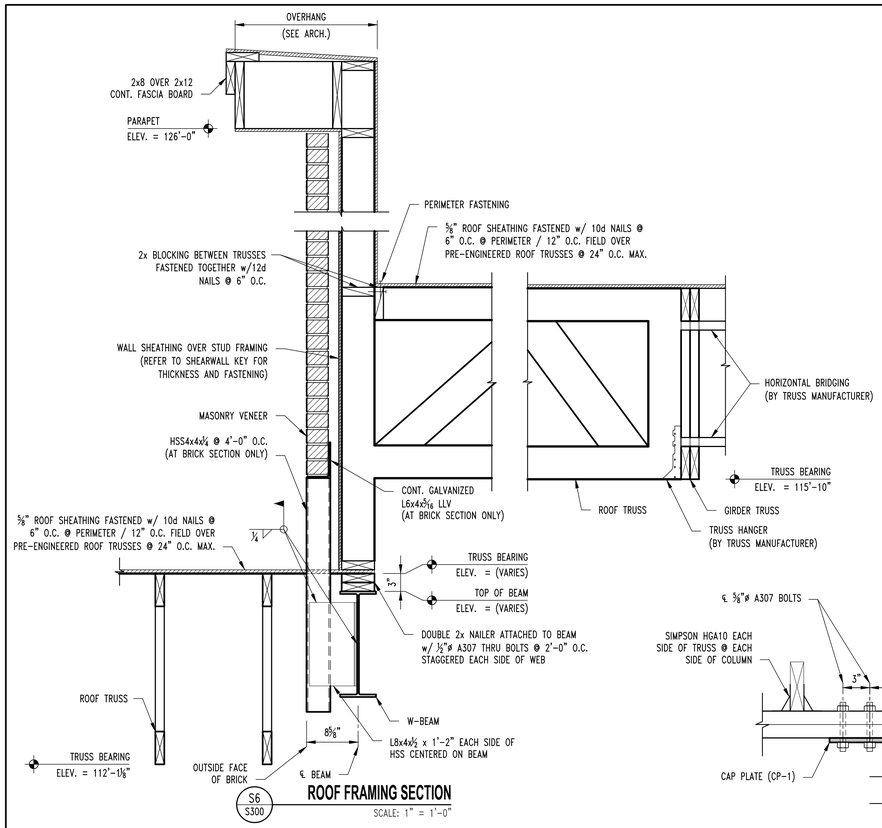

S6 / S300 **ROOF FRAMING SECTION**
SCALE: 1" = 1'-0"

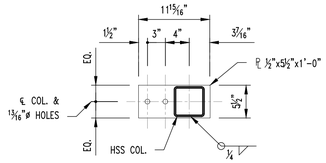

CAP PLATE (CP-1)

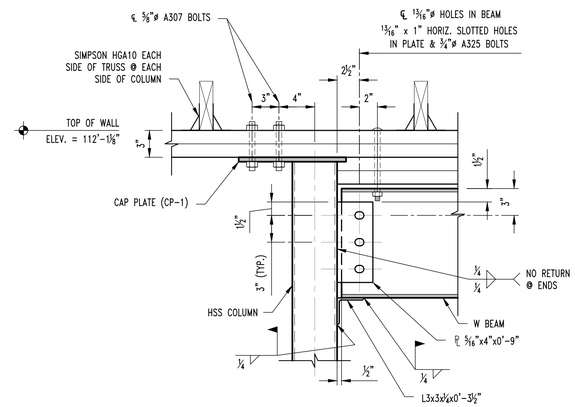

S7 / S300 **BEAM TO COLUMN TO TOP OF WALL SECTION**
SCALE: 1½" = 1'-0"

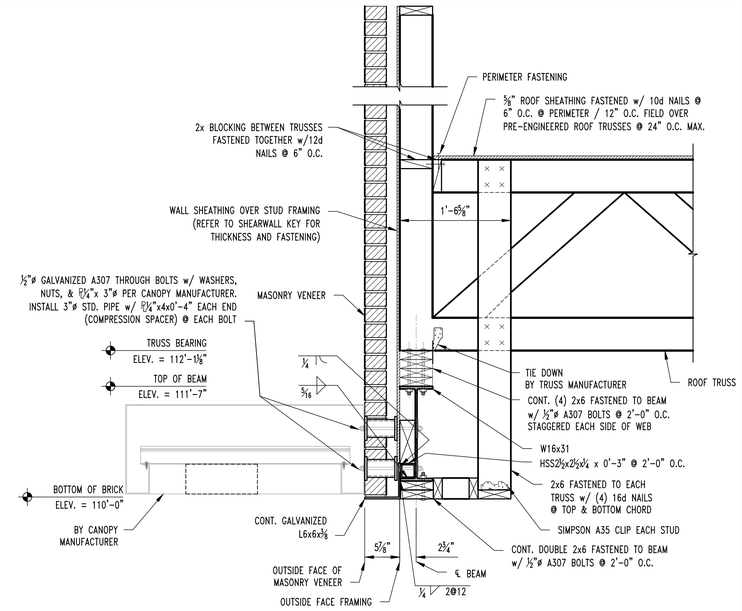

S8 / S300 **LOWER SECTION @ TYP. WINDOWS**
SCALE: 1" = 1'-0"

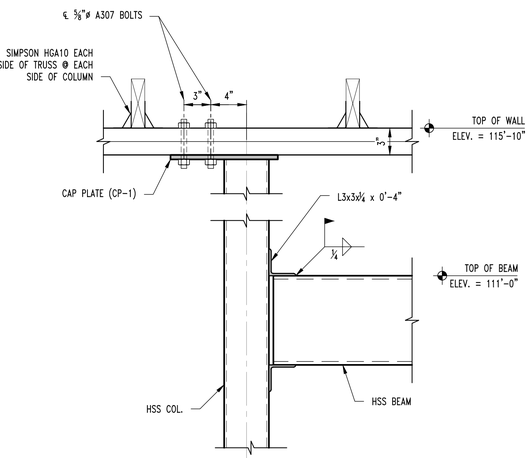

A / S311 **BEAM TO COLUMN TO TOP OF WALL SECTION**
SCALE: 1½" = 1'-0"

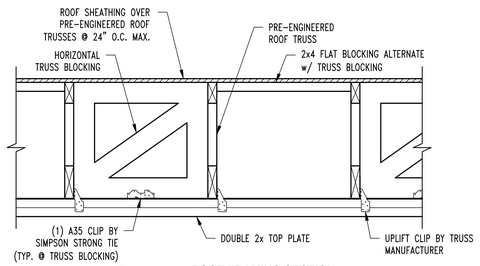

B / S311 **ROOF FRAMING SECTION**
SCALE: 1" = 1'-0"

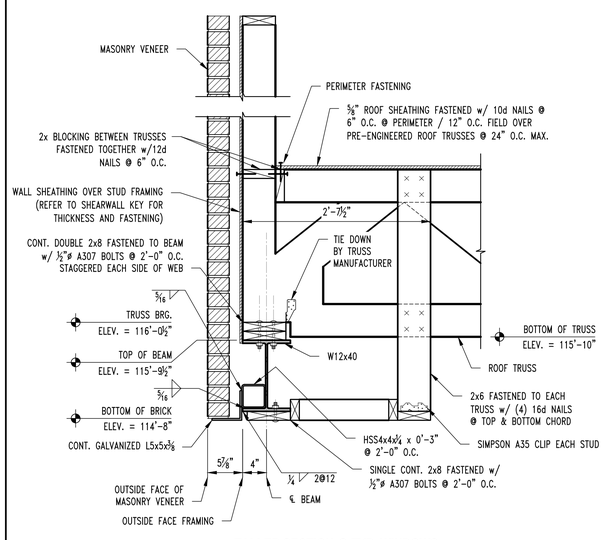

S9 / S300 **TALLER SECTION @ TYP. WINDOWS**
SCALE: 1" = 1'-0"

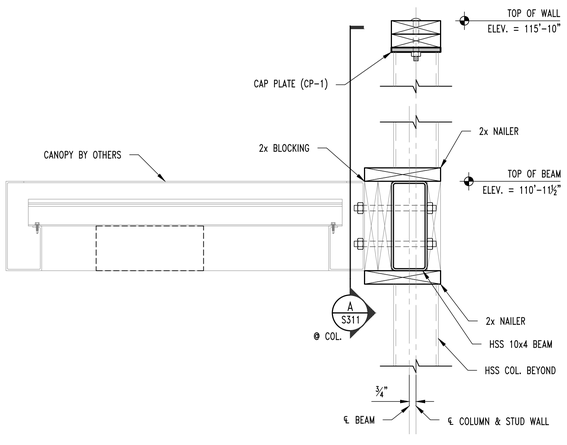

S10 / S300 **SECTION @ CANOPY**
SCALE: 1" = 1'-0"

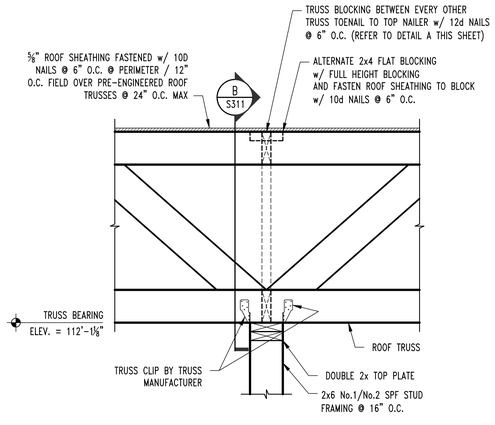

S11 / S300 **ROOF FRAMING SECTION**
SCALE: 1" = 1'-0"

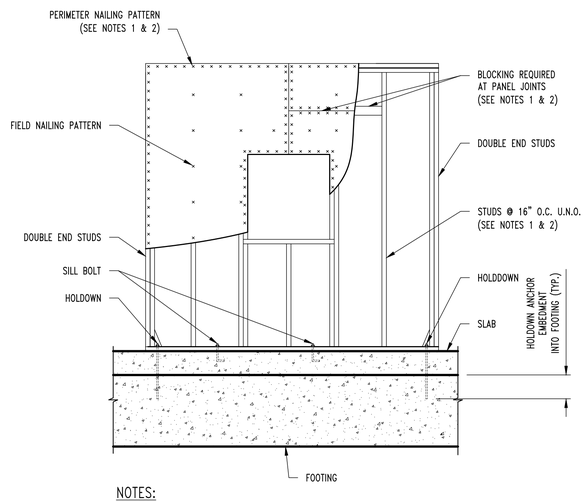

NOTES:
1. WHERE TWO SHEETS MEET, BOTH SHEETS SHOULD BE NAILED TO THE SAME FRAMING MEMBER.
2. WHEN SHEATHING NAILS ARE SPACED AT 2" O.C. FOR 8d NAILS OR 3" O.C. FOR 10d NAILS, 3x OR DOUBLE 2x FRAMING MEMBERS ARE REQUIRED WHERE SHEETS MEET. FACE NAIL DOUBLE 2x MEMBERS TOGETHER w/ 16d NAILS @ 2½" O.C. STAGGERED EACH FACE OF STUD.
3. SEE WALL SECTIONS FOR ADDITIONAL INFORMATION.

TYP. SHEAR WALL DETAIL

REVISIONS:

No.	Date
PERMIT SET	03/17/2023

THIS SHEET HAS BEEN SIGNED, SEALED AND DATED ELECTRONICALLY
STATE OF MISSOURI
GREGORY L. LINNEMAN
NUMBER PE-2005001013
3/17/23
GREGORY L. LINNEMAN - PE
MO LICENSE - 2005001013

STRUCTURAL ENGINEER:
CROCKETT
ENGINEERING CONSULTANTS
1000 W. NIFONG BLDG. 1
Columbia, Missouri 65203
(573) 447-0092
www.crockettengineering.com
Crockett Engineering Consultants, LLC
Missouri Certificate of Authority
#2006015501

CLIENT:
BAALMAN ARCHITECTS
162 DANIEL DRIVE
O'FALLON, MISSOURI

HAWK RIDGE DENTAL CARE

8625 HWY N
LAKE SAINT LOUIS, ST. CHARLES COUNTY, MISSOURI

DRAWING INCLUDES:
FRAMING DETAILS

DESIGNED:	GLL
DRAWN:	TGC
PROJECT NO.:	230010

SHEET:
S311

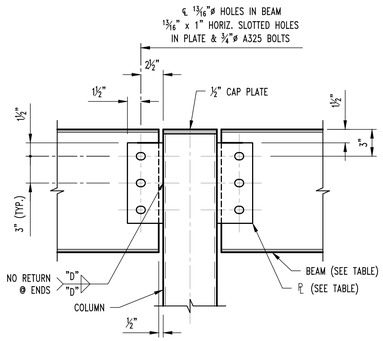

BEAM SIZE	No. OF BOLTS "N"	PLATE SIZE	WELD SIZE "D"
W12	3	5/16x4x0'-9"	¼"
W16	4	5/16x4x1'-0"	¼"
W21	6	5/16x4x1'-6"	¼"

S20 / S300 **TYP. BEAM TO COLUMN SECTION**
SCALE: 1½" = 1'-0"

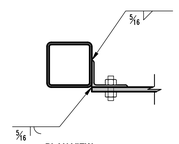

PLAN VIEW

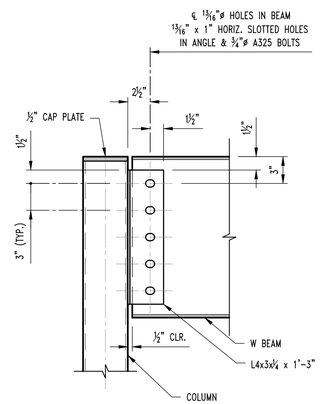

S21 / S300 **TYP. BEAM TO COLUMN SECTION**
SCALE: 1½" = 1'-0"

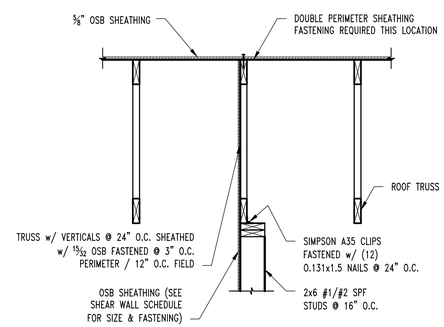

S22 / S300 **SHEAR WALL SECTION**
SCALE: ¾" = 1'-0"

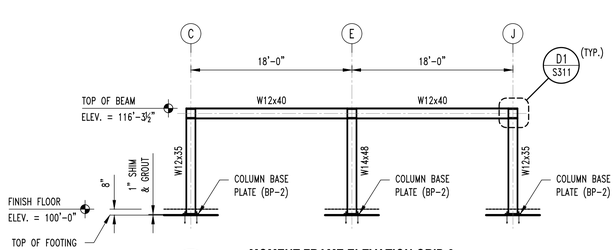

B1 / S300 **MOMENT FRAME ELEVATION GRID 2**
SCALE: ⅛" = 1'-0"

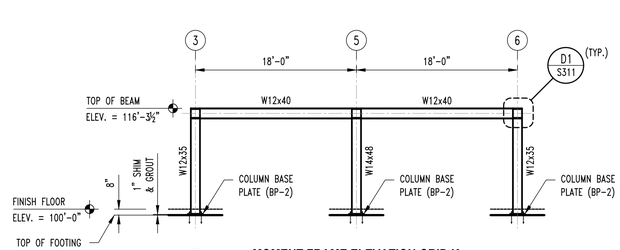

B2 / S300 **MOMENT FRAME ELEVATION GRID K**
SCALE: ⅛" = 1'-0"

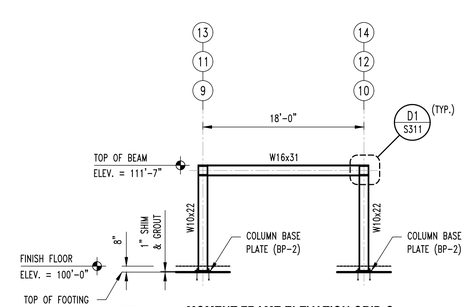

B3 / S300 **MOMENT FRAME ELEVATION GRID G**
SCALE: ⅛" = 1'-0"

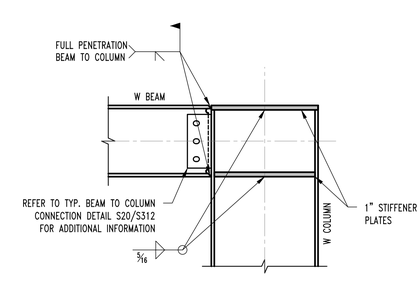

D1 / S310 **CONNECTION DETAIL**
SCALE: 1" = 1'-0"

REVISIONS:

No.	Date
PERMIT SET	03/17/2023

THIS SHEET HAS BEEN SIGNED, SEALED AND DATED ELECTRONICALLY

STATE OF MISSOURI
GREGORY L. LINNEMAN
NUMBER
PE-2005001013
3/17/23

GREGORY L LINNEMAN - PE
MO LICENSE - 2005001013

STRUCTURAL ENGINEER:
CROCKETT
ENGINEERING CONSULTANTS
1000 W Nifong Blvd. Bldg. 1
Columbia, Missouri 65203
(573) 447-0292
www.crockettengineering.com
Crockett Engineering Consultants, LLC
Missouri Certificate of Authority
#2006015501

CLIENT:
BAALMAN ARCHITECTS
#2 DANIEL DRIVE
O' FALLON, MISSOURI

HAWK RIDGE DENTAL CARE

8625 HWY N
LAKE SAINT LOUIS, ST. CHARLES COUNTY, MISSOURI

DRAWING INCLUDES:
FRAMING DETAILS

DESIGNED:	GLL
DRAWN:	TGC
PROJECT NO.:	230010

SHEET:
S312

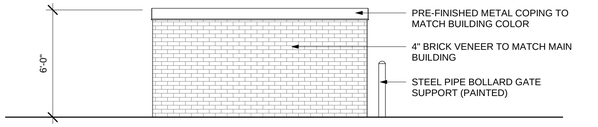

10 TRASH ENCLOSURE - LEFT ELEVATION

A1.1 1/4" = 1'-0"

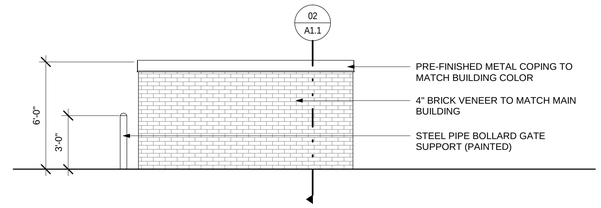

09 TRASH ENCLSOURE - RIGHT ELEVATION

A1.1 1/4" = 1'-0"

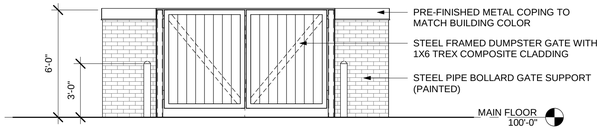

08 TRASH ENCLOSURE - FRONT ELEVATION

A1.1 1/4" = 1'-0"

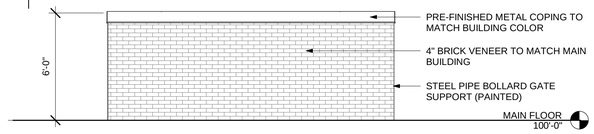

07 TRASH ENCLOSURE - BACK ELEVATION

A1.1 1/4" = 1'-0"

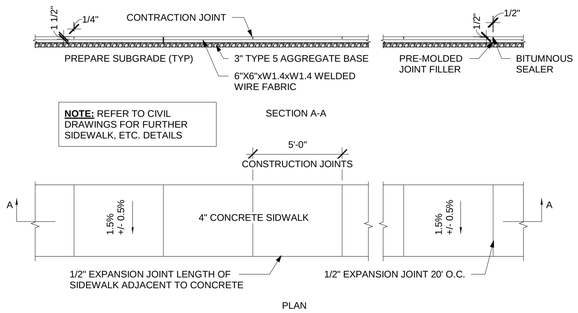

06 SIDEWALK DETAILS

A1.1 1/4" = 1'-0"

GENERAL NOTES - SITE PLAN

1. BENCHMARK GRADE FOR FLOOR PLAN IS 100'-0"
2. ALL CONSTRUCTION AND MATERIALS SHALL CONFORM TO THE CURRENT CONSTRUCTION STANDARDS OF MANCHESTER, MISSOURI
3. REFER TO CIVIL DRAWINGS FOR OTHER DETAILED INFORMATION REGARDING THE SITE WORK

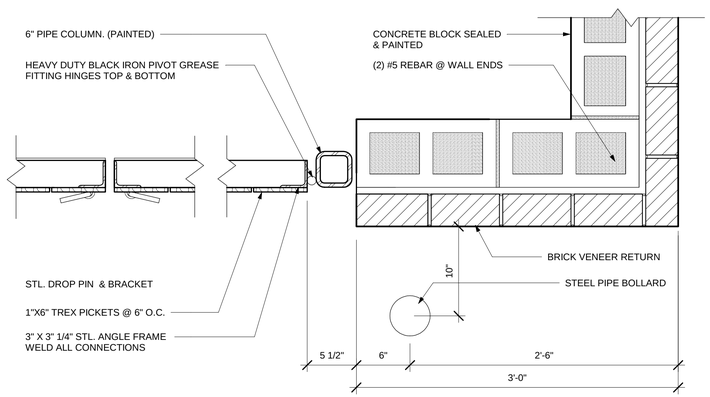

05 PLAN DTL - TRASH ENCLOSURE HINGE

A1.1 1 1/2" = 1'-0"

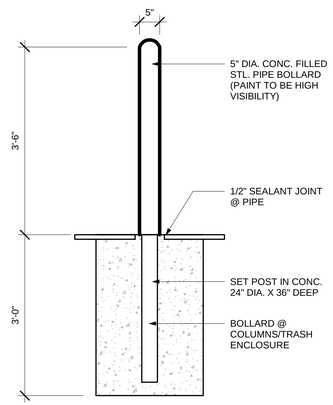

04 DTL SECT - PIPE BOLLARD

A1.1 3/4" = 1'-0"

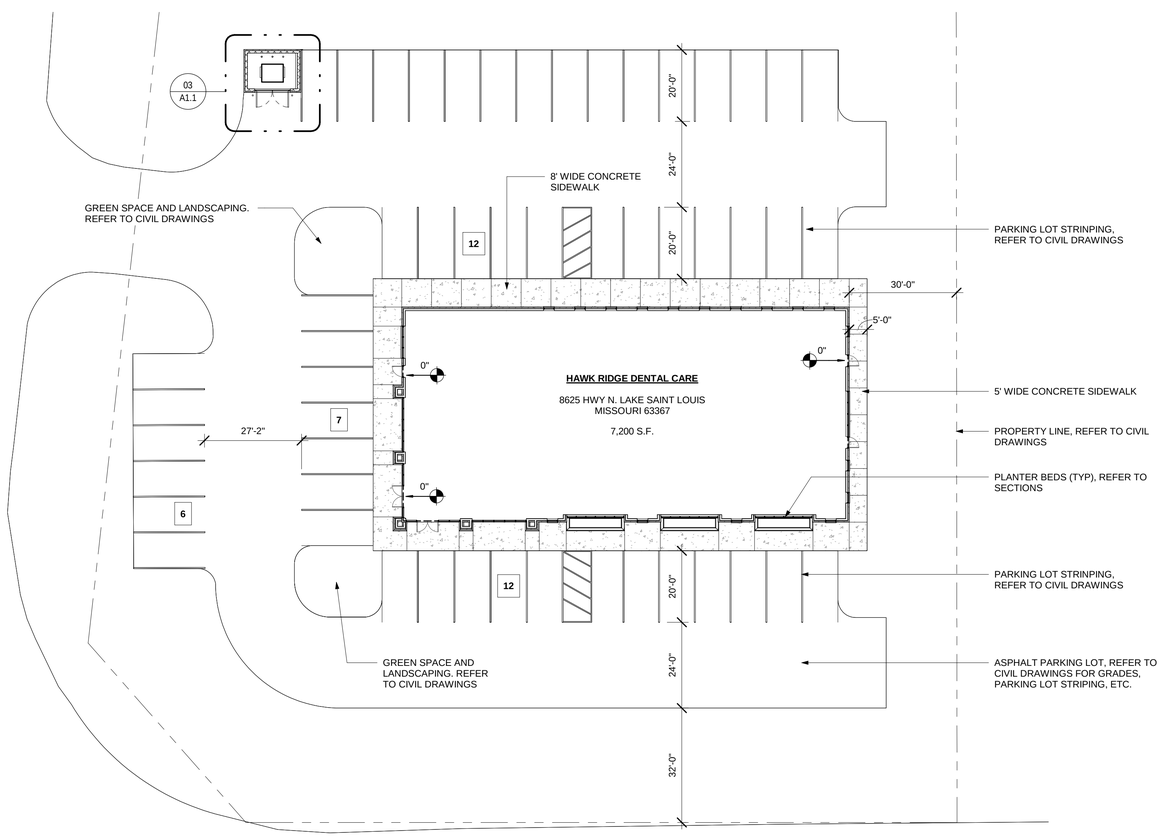

01 ARCHITECTURAL SITE PLAN

A1.1 1" = 20'-0"

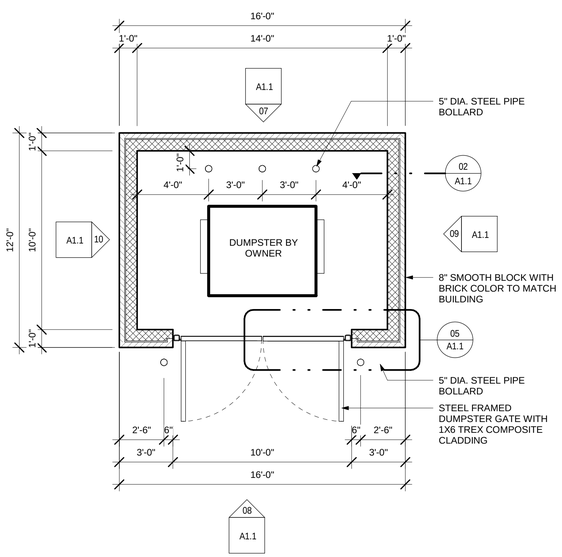

03 ENLARGED PLAN - TRASH ENCLOSURE

A1.1 1/4" = 1'-0"

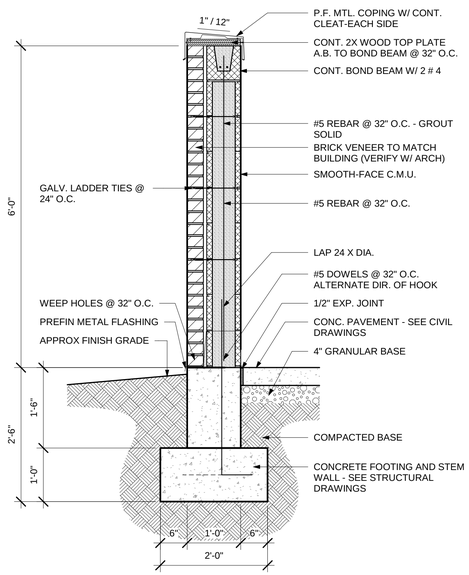

02 WALL SECT - TRASH ENCLOSURE

A1.1 3/4" = 1'-0"

COPYRIGHT 2022 BAALMAN ARCHITECTS

BAALMAN ARCHITECTS
2 Daniel Dr.
OFallon, Mo 63366
ph: 314.640.6212

Michael J. Baalman
ARCHITECT
License#: A-2012004035
Certificate of Authority: 2014003655

New Build Dentist Office For:

Hawk Ridge Dental Care

8631 HWY N
Lake Saint Louis, Missouri 63367

DATE	ISSUE	R#
03/17/2023	PERMIT & BID	1

STATE OF MISSOURI
MICHAEL J. BAALMAN
NUMBER A-2012004035
ARCHITECT
03-17-2023

Michael J. Baalman
ARCHITECT
License#: A-2012004035

PROJECT MANAGER: MJB
DRAWN BY: CJT

PROJECT NUMBER
21-042

DATE
03/17/2023

SHEET
A1.1
ARCH SITE PLAN

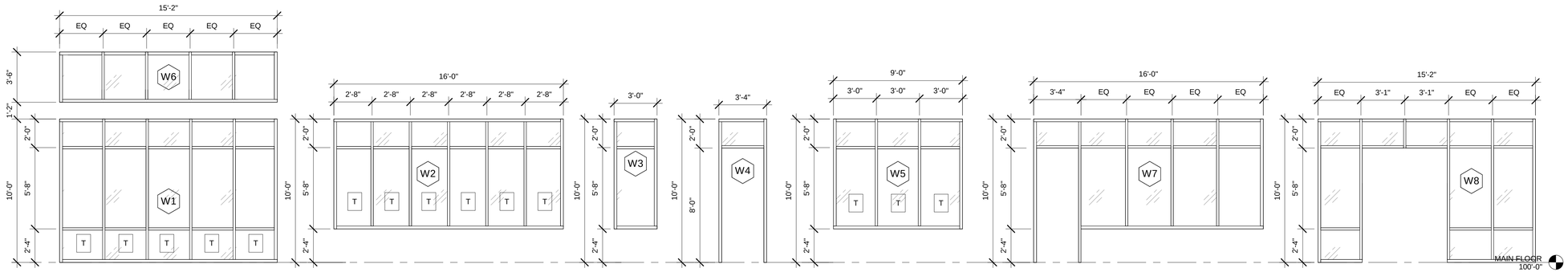

PRE-FINISHED ALUMINUM WINDOW WITH SOLAR BRONZE LOW-E GLAZING

PRE-FINISHED CLEAR ANODIZED ALUMINUM WINDOW WITH SOLAR BRONZE LOW-E GLAZING

PRE-FINISHED ALUMINUM WINDOW WITH SOLAR BRONZE LOW-E GLAZING

PRE-FINISHED ALUMINUM WINDOW WITH SOLAR BRONZE LOW-E GLAZING

PRE-FINISHED ALUMINUM WINDOW WITH SOLAR BRONZE LOW-E GLAZING

PRE-FINISHED ALUMINUM WINDOW WITH SOLAR BRONZE LOW-E GLAZING

02 ALUMINUM STOREFRONT TYPES

A2.1 1/4" = 1'-0"

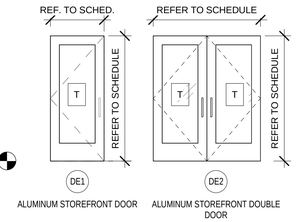

ALUMINUM STOREFRONT DOOR

ALUMINUM STOREFRONT DOUBLE DOOR

DOOR TYPES

1/4" = 1'-0"

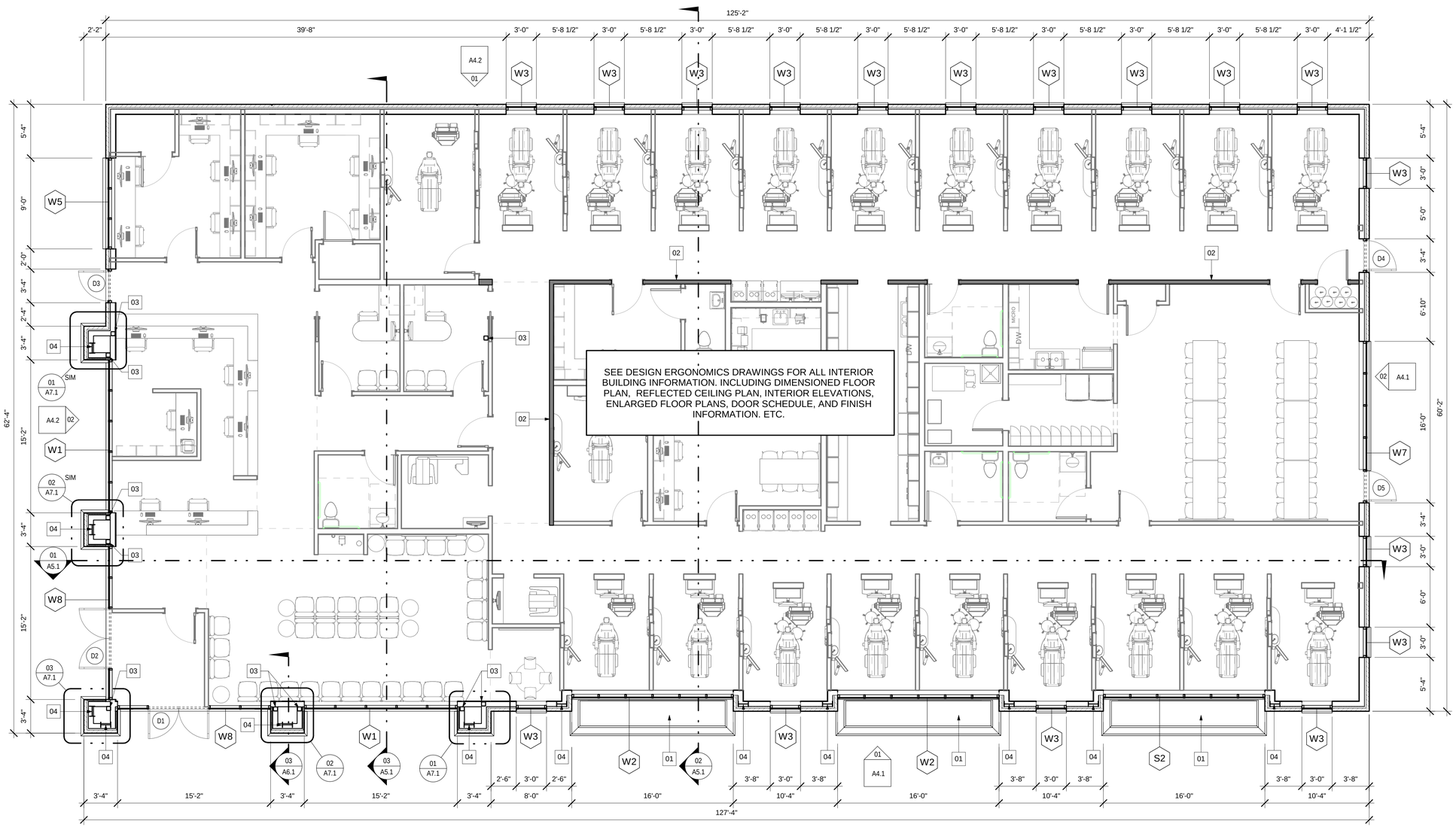

01 SHELL FLOOR PLAN

A2.1 3/16" = 1'-0"

NEW WORK GENERAL NOTES

1. FIELD VERIFY ALL DIMENSIONS. IF DIMENSIONS VARY SIGNIFICANTLY NOTIFY THE ARCHITECT
2. DIMENSIONS ARE TO FACE OF SHEATHING UNLESS NOTED OTHERWISE.
3. REFER TO MANUFACTURER'S REQUIREMENTS FOR ALL OWNER PROVIDED EQUIPMENT ITEMS.
4. PROVIDE ELECTRIC, PLUMBING AND MECHANICAL SYSTEMS AS REQUIRED.
5. CONTRACTOR TO INSTALL ALL OWNER PROVIDED EQUIPMENT. VERIFY WITH OWNER.
6. LOCATE GYPSUM BOARD CONTROL JOINTS AT DOOR FRAMES WHEN POSSIBLE
7. PROVIDE CORNER GUARDS ON ALL OUTSIDE CORNERS WHERE APPLICABLE. VERIFY LOCATIONS WITH OWNER.

KEYNOTES - PLAN

01 EXTERIOR PLANTER BEDS - SEE WALL SECTIONS ON SHEET A6.1/02 AND REFER TO STRUCTURAL DRAWINGS
02 SHEAR WALL - REFER TO STRUCTURAL DRAWINGS
03 HSS STEEL COLUMN - REFER TO STRUCTURAL DRAWINGS
04 STEEL I-BEAM MOMENT FRAME - REFER TO STRUCTURAL DRAWINGS

DOOR AND FRAME SCHEDULE

DOOR NO	DOOR SIZE W	H	THK	MATL	ELEV
MAIN FLOOR					
D1	6'-0"	8'-0"	1 3/4"	ALUM/GLASS	DE2
D2	6'-0"	8'-0"	1 3/4"	ALUM/GLASS	DE2
D3	3'-0"	8'-0"	1 3/4"	ALUM/GLASS	DE1
D4	3'-0"	8'-0"	1 3/4"	ALUM/GLASS	DE1
D5	3'-0"	8'-0"	1 3/4"	ALUM/GLASS	DE1

STOREFRONT

NUMBER	Comments
1	ALL EXTERIOR STOREFRONT AND WINDOW FRAMES TO BE THERMALLY BROKEN
2	ALL ALUMINUM STOREFRONT FRAMES & DOORS TO BE CLEAR ANODIZED FINISH
3	VERIFY ALL OPENING WIDTHS & HEIGHTS FOR STOREFRONT UNITS PRIOR TO FABRICATION

GLASS TYPES

NUMBER	Comments
1	ALL EXTERIOR GLAZING TO BE 1" INSULATED - SOLAR GREY LOW E
2	PROVIDE TEMPERED SAFETY GLAZING AS REQUIRED TO MEET 2015 IBC.
3	TEMPERED GLASS NOTED WITH "T"

HARDWARE SCHDULE NOTES

#	NOTE
1	CONTRACTOR TO PROVIDE A $400 ALLOWANCE PER DOOR FOR ASSOCIATED DOOR HARDWARE FOR ALL DOORS EXCEPT THE ALUMINUM DOORS. DOOR HARDWARE FOR ALUMINUM DOORS IS TO BE INCLUDED FROM THE ALUMNUM DOOR MANUFACTURER. CONTRACTOR IS TO PROVIDE HARDWARE AND KEYING SCHEDULE TO ARCHITECT AND OWNER FOR REVIEW. CONFIRM IF ANY ELECTRIC STRIKE AND OR ACCESS CONTROL IS REQUIRED.
2	ALL LATCHING INTERIOR DOORS TO HAVE LEVER TYPE ADA APPROVED ACCEPTABLE HARDWARE UNLESS OTHERWISE NOTED.
3	ALL HANDICAPPED ACCESSIBLE ROOM DOORS ARE REQUIRED TO HAVE A MINIMUM OF 12" CLEARANCE ON PUSH SIDE AND 18" CLEARANCE ON PULL SIDE. CONFORM TO ADA.
4	VERIFY ALL HARDWARE WITH OWNER AND HARDWARE SUPPLIER PRIOR TO INSTALLATION. ALL HARDWARE IS TO BE IN CONFORMANCE WITH 2015 IBC AND LOACL FIRE DEPARTMENT.
5	ALL EGRESS DOORS SHALL BE READILY OPENABLE FROM THE EGRESS SIDE WITHOUT THE USE OF A KEY OR SPECIAL KNOWLEDGE OR EFFORT PER SECTION 1008 OF THE 2015 IBC.

COPYRIGHT 2022 BAALMAN ARCHITECTS

BAALMAN ARCHITECTS
2 Daniel Dr.
OFallon, Mo 63366
ph: 314.640.6212

Michael J. Baalman
ARCHITECT
License#: A-2012004035
Certicicate of Authority:
2014003655

New Build Dentist Office For:

Hawk Ridge Dental Care

8631 HWY N
Lake Saint Louis, Missouri 63367

DATE	ISSUE	R#
03/17/2023	PERMIT & BID	1

STATE OF MISSOURI
MICHAEL J. BAALMAN
NUMBER A-2012004035
03-17-2023
ARCHITECT

Michael J. Baalman
ARCHITECT
License#: A-2012004035

PROJECT MANAGER: MJB
DRAWN BY: CJT

PROJECT NUMBER
21-042
DATE
03/17/2023

SHEET
A2.1
FIRST FLOOR PLAN

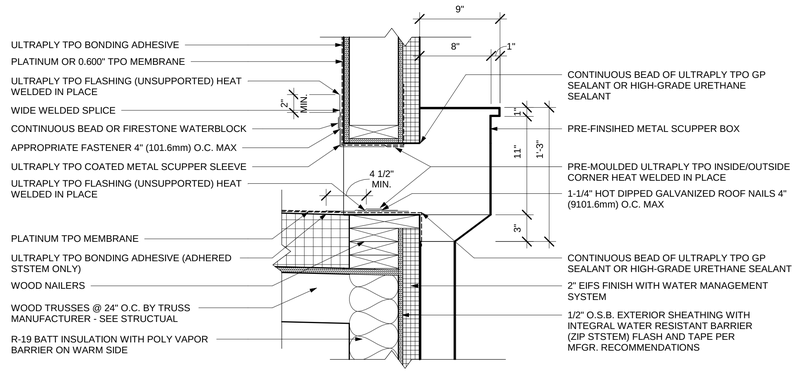

03 DTL SECT - SCUPPER OPENING

A3.1 1 1/2" = 1'-0"

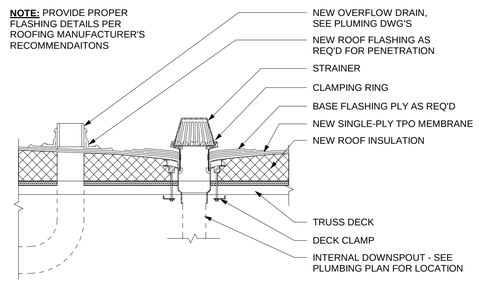

02 DTL SECT - INTERAL ROOF DRAINS

A3.1 1 1/2" = 1'-0"

KEYNOTES - ROOF PLAN

01 PRE-FINISHED METAL PARAPET CORNNICE
02 DASHED LINE INDICATES EXTERIOR WALL BELOW
03 SINGLE PLY TPO ROOFING SYSTEM PER MANUFACTURER RECOMMENDATIONS - 60 MIL FULLY ADHERED WITH 20 YEAR WARRANTY. ROOFING CONTRACTORS TO SLOPE ROOF TO ROOF DRAINS AND PROVIDE POSTIVE DRAINAGE - NO PONDING OF WATER ALLOWED
04 BUILT-UP ROOF CRICKET
05 ROOF DRAIN AND OVERFLOW ROOF DRAIN
06 ROOF ACCESS PARAPET OPENING
07 PRE-FINISHED CANTILEVERED METAL AWNING
08 PRE-FINISHED METAL SCUPPER BOX AND DOWNSPOUT

NEW WORK ROOF GENERAL NOTES

1. INSTALLATION OF ALL ROOFING COMPENETS, ACCESSORIES, ETC... SHALL BE INSTALLED IN A MANNER WHICH PROVIDES POSITIVE DRAINAGE TO THE GUTTER & DOWN SPOUTS - NO WATER PONDING ALLOWED.
2. SHEET METAL CONTRACTOR SHALL PROVIDE DETAILED SHOP DRAWINGS OF GUTTER BOX, DOWNSPOUTS AND FLASHINGS FOR REVIEW AND APPROVAL BY THE ARCHITECT PRIOR TO FABRICATION AND INSTALLATION.
3. PROVIDE SINGLE PLY MEMBRANE FLASHING OVER ALL WOOD CURBS AND TOP WITH PRE-FINISHED METAL CAP.
4. RTU'S ARE SHOWN FOR REFERENCE ONLY. REFER TO MECHANICAL DRAWINGS FOR ACTUAL SIZE AND LOCATION.
5. ALL ROOF PENETRATIONS SHALL BE FLASHED AS REQUIRED BY ROOFING MANUFACTURER'S SPECIFICAITONS.
6. WALK PADS TO BE LOCATED TO PROVIDE ACCESS TO RTU'S PER ACTUALL SIZE AND LOCATIONS PER MECHANICAL DRAWINGS.
7. ATTIC DRAFTSTOPPING SHALL BE INSTALLED WHERE SHOWN OR AT A MAXIMUM OF 3,000 S.F. OPEN ATTIC SPACE
8. DRAFTSTOPPING SHALL INCLUDE 1/2" MINIMUM GYPSUM BOARD OR AS ACCEPTED BY THE 2015 IBC CHAPTER 718 CONCEALED SPACES

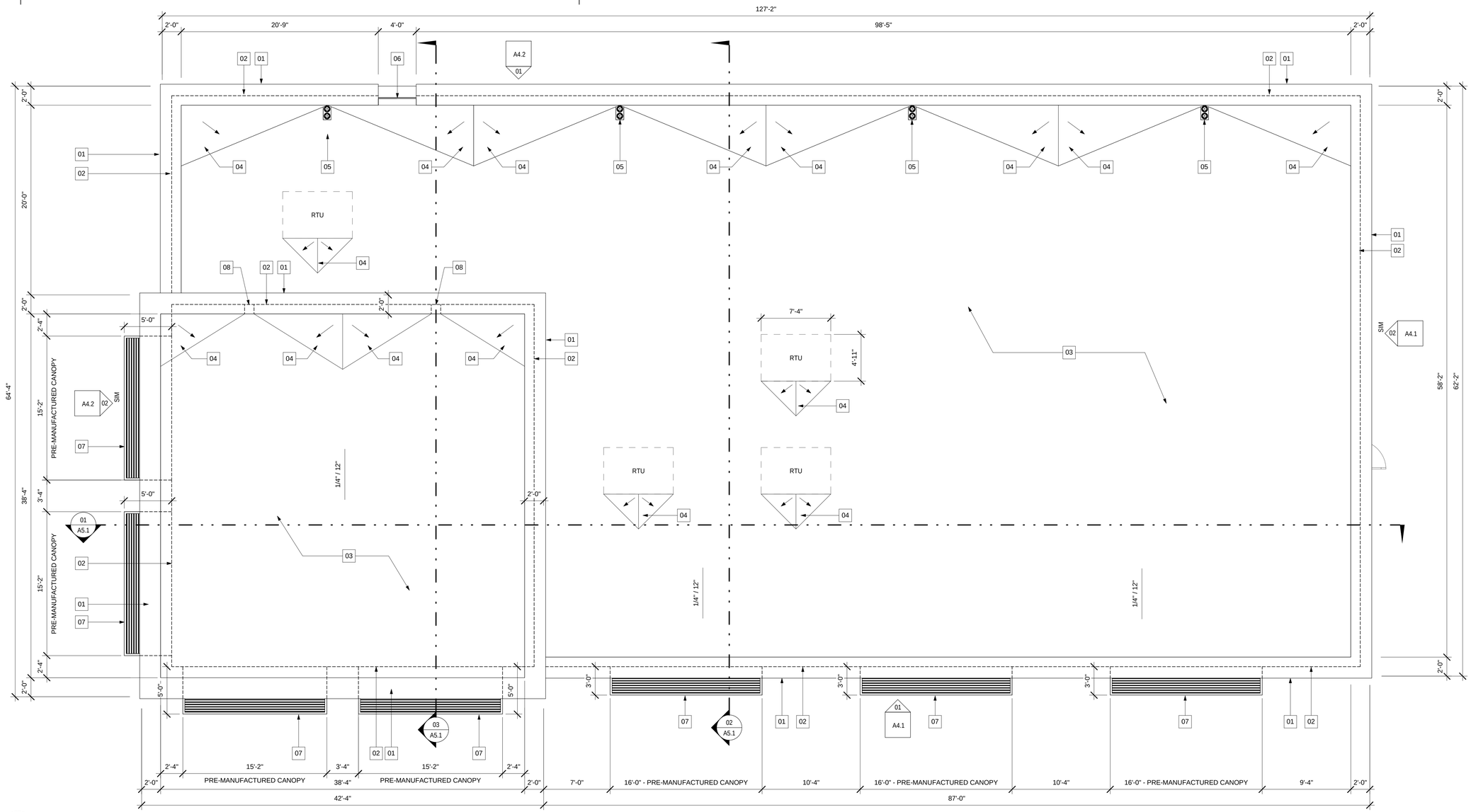

01 ROOF PLAN

A3.1 3/16" = 1'-0"

COPYRIGHT 2022 BAALMAN ARCHITECTS

BAALMAN ARCHITECTS
2 Daniel Dr.
OFallon, Mo 63366
ph: 314.640.6212

Michael J. Baalman
ARCHITECT
License#: A-2012004035
Certicicate of Authority: 2014003655

New Build Dentist Office For:
Hawk Ridge Dental Care
8631 HWY N
Lake Saint Louis, Missouri 63367

DATE	ISSUE	R#
03/17/2023	PERMIT & BID	1

STATE OF MISSOURI
MICHAEL J. BAALMAN
NUMBER A-2012004035
ARCHITECT
03-17-2023

Michael J. Baalman
ARCHITECT
License#: A-2012004035

PROJECT MANAGER: MJB
DRAWN BY: CJT

PROJECT NUMBER
21-042
DATE
03/17/2023

SHEET
A3.1
ROOF PLAN

EXTERIOR MATERIALS AND FINISH SCHDULE:

FIELD BRICK:
STANDARD MODULAR BRICK - SIOUX CITY - BADLANDS VELOUR
FIELD BRICK MORTAR - SEALANT ADDITIVE WITH WEATHERED JOINTS - COLOR: LIGHT BUFF

STONE VENEER STSTEM:
DIMENSIONAL, CALACATTA, URBANA TRAVERTINE, VENEER - QUALITY STONE VENEER INC. OR EQ

MORTAR:
SEALANT ADDITIVE WITH WEATHERED JOINTS - COLOR: LIGHT BUFF

CAST STONE BAND:
COLOR TO BE NATURAL LIMESTONE AS MANUFACTURED BY CALIBER CAST STONE OR EQ

HORIZONTAL WALL PANEL:
COMPOSITE WOOD PANEL, NICHIHA ARCHITECTURAL WALL PANELS OR EQ - COLOR:CEDAR

SHEET METAL COPING & TRIM AND GUTTERS & DOWNSPOUTS:
PREFINISHED ALUMINUM - KYNAR 500 COLOR:DARK BRONZE

LOW SLOPE ROOF:
SINGLE PLY TPO ROOFING SYSTEM PER MANUFACTURERS RECOMMENDATIONS, 60 MIL FULLY ADHERED WITH A 20-YEAR WARRANTY

PRE-FINISHED METAL AWNING:
LAWRENCE LFS-FLD OR EQ - COLOR: DARK BRONZE

ALUMINUM CURTAINWALL AND STOREFRONT SYSTEMS:
WINDOW FRAMES TO BE CLEAR ANODIZED, EXTERIOR GLAZING TO BE SOLAR BRONZE, LOW-E GLASS

KEYNOTES - BUILDING ELEVATION

01 APPROXIMATE FINISH GRADE OR CONCRETE SIDEWALK. REFER TO CIVIL DRAWINGS
02 BRICK VENEER
03 PRE-FINISHED ALUMINUM STOREFRONT WINDOW SYSTEM. SEE WINDOW TYPES.
04 PRE-MANUFACTURED METAL CANTILEVERED CANOPY - SEE WALL SECTION
05 PRE-CAST STONE ACCENT BAND
06 HORIZONTAL FAUX WOOD CLADDING (NICHIHA)
07 FAUX WOOD WALL TRIM
08 PRE-FINISHED METAL CORNICE - 2X6 OVER 2X12 CONTINUOUS FASCIA BOARD
09 STONE VENEER SYSTEM
10 STONE VENEER SYSTEM - DECORATIVE BAND
11 WALL SCONCE - SEE MEP
12 PRE-CAST STONE LINTEL
13 EXTERIOR BACKLITE SIGNAGE BY OTHERS - COORDINATE WITH OWNER AND SIGN DESIGNER
14 ATTACHED ROOF ACCESS LADDER
15 CONTINUOUS LED STRIP LIGHT UNDER PARAPET CORNICE - SEE DETAIL SECTIONS
16 EIFS AND EIFS REVEAL JOINTS - COLOR TO MATCH BRICK
17 MASONARY CONTROL JOINT
18 EXTERIOR WALL PACKS
19 ROOF ACCESS PARAPET OPENING

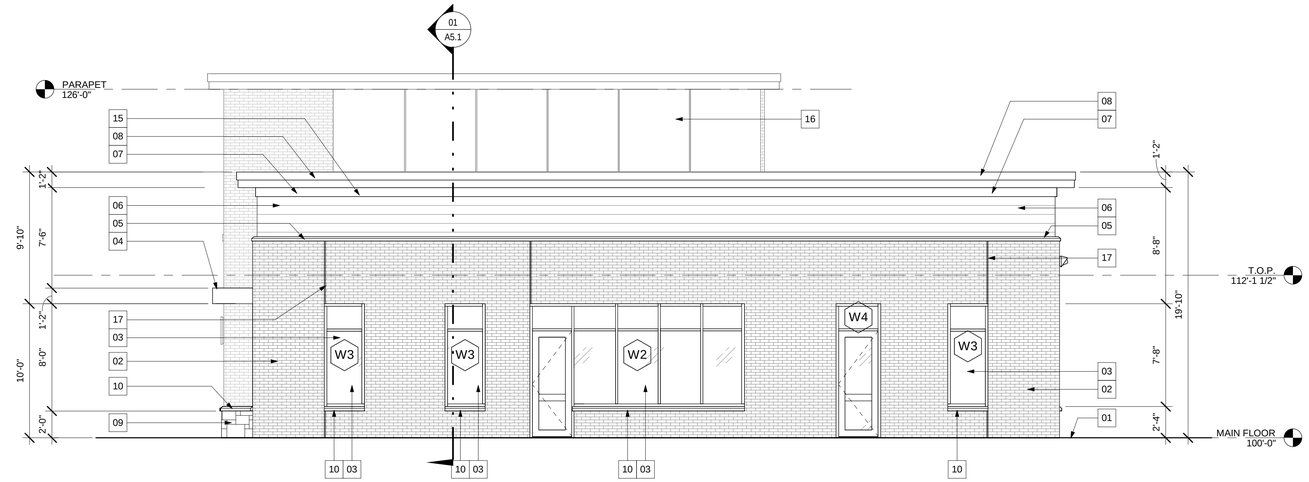

02 EAST ELEVATION
A2.1 A4.1 3/16" = 1'-0"

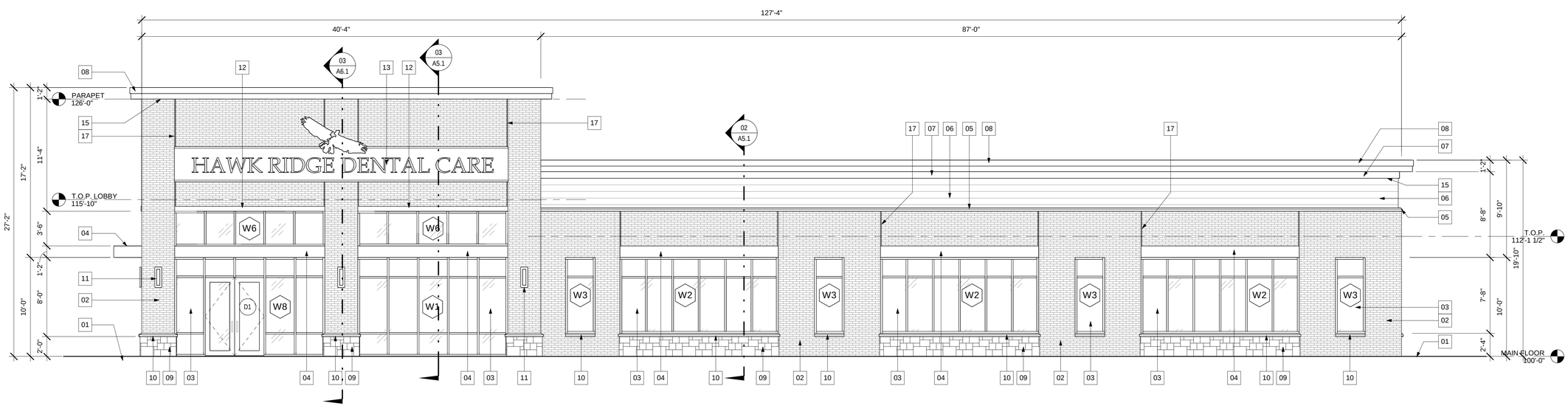

01 SOUTH ELEVATION
A2.1 A4.1 3/16" = 1'-0"

COPYRIGHT 2022 BAALMAN ARCHITECTS

BAALMAN ARCHITECTS
2 Daniel Dr.
OFallon, Mo 63366
ph: 314.640.6212

Michael J. Baalman
ARCHITECT
License#: A-2012004035
Certicicate of Authority:
2014003655

New Build Dentist Office For:
Hawk Ridge Dental Care
8631 HWY N
Lake Saint Louis, Missouri 63367

DATE	ISSUE	R#
03/17/2023	PERMIT & BID	1

STATE OF MISSOURI
MICHAEL J. BAALMAN
NUMBER A-2012004035
03-17-2023
ARCHITECT

Michael J. Baalman
ARCHITECT
License#: A-2012004035

PROJECT MANAGER: MJB
DRAWN BY: CJT

PROJECT NUMBER
21-042
DATE
03/17/2023

SHEET
A4.1
BUILDING ELEVATIONS

EXTERIOR MATERIALS AND FINISH SCHDULE:

FIELD BRICK:
STANDARD MODULAR BRICK - SIOUX CITY - BADLANDS VELOUR
FIELD BRICK MORTAR - SEALANT ADDITIVE WITH WEATHERED JOINTS - COLOR: LIGHT BUFF

STONE VENEER STSTEM:
DIMENSIONAL, CALACATTA, URBANA TRAVERTINE, VENEER - QUALITY STONE VENEER INC. OR EQ

MORTAR:
SEALANT ADDITIVE WITH WEATHERED JOINTS - COLOR: LIGHT BUFF

CAST STONE BAND:
COLOR TO BE NATURAL LIMESTONE AS MANUFACTURED BY CALIBER CAST STONE OR EQ

HORIZONTAL WALL PANEL:
COMPOSITE WOOD PANEL, NICHIHA ARCHITECTURAL WALL PANELS OR EQ - COLOR:CEDAR

SHEET METAL COPING & TRIM AND GUTTERS & DOWNSPOUTS:
PREFINISHED ALUMINUM - KYNAR 500 COLOR:DARK BRONZE

LOW SLOPE ROOF:
SINGLE PLY TPO ROOFING SYSTEM PER MANUFACTURERS RECOMMENDATIONS, 60 MIL FULLY ADHERED WITH A 20-YEAR WARRANTY

PRE-FINISHED METAL AWNING:
LAWRENCE LFS-FLD OR EQ - COLOR: DARK BRONZE

ALUMINUM CURTAINWALL AND STOREFRONT SYSTEMS:
WINDOW FRAMES TO BE CLEAR ANODIZED, EXTERIOR GLAZING TO BE SOLAR BRONZE, LOW-E GLASS

KEYNOTES - BUILDING ELEVATION

01 APPROXIMATE FINISH GRADE OR CONCRETE SIDEWALK. REFER TO CIVIL DRAWINGS
02 BRICK VENEER
03 PRE-FINISHED ALUMINUM STOREFRONT WINDOW SYSTEM. SEE WINDOW TYPES.
04 PRE-MANUFACTURED METAL CANTILEVERED CANOPY - SEE WALL SECTION
05 PRE-CAST STONE ACCENT BAND
06 HORIZONTAL FAUX WOOD CLADDING (NICHIHA)
07 FAUX WOOD WALL TRIM
08 PRE-FINISHED METAL CORNICE - 2X6 OVER 2X12 CONTINUOUS FASCIA BOARD
09 STONE VENEER SYSTEM
10 STONE VENEER SYSTEM - DECORATIVE BAND
11 WALL SCONCE - SEE MEP
12 PRE-CAST STONE LINTEL
13 EXTERIOR BACKLITE SIGNAGE BY OTHERS - COORDINATE WITH OWNER AND SIGN DESIGNER
14 ATTACHED ROOF ACCESS LADDER
15 CONTINUOUS LED STRIP LIGHT UNDER PARAPET CORNICE - SEE DETAIL SECTIONS
16 EIFS AND EIFS REVEAL JOINTS - COLOR TO MATCH BRICK
17 MASONARY CONTROL JOINT
18 EXTERIOR WALL PACKS
19 ROOF ACCESS PARAPET OPENING

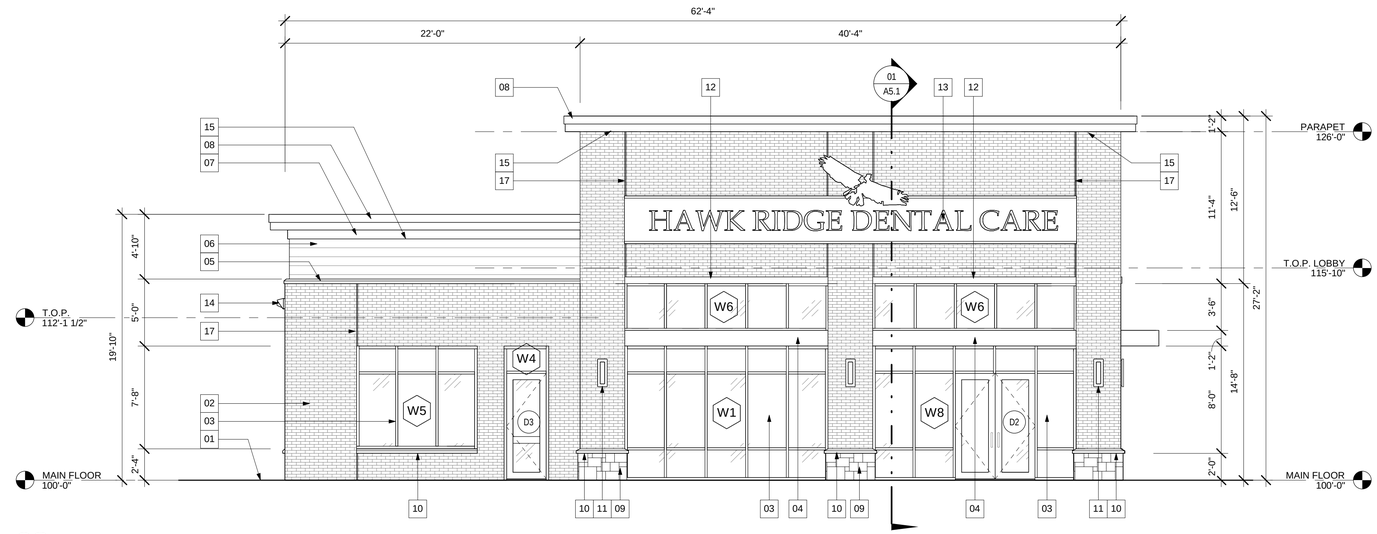

02 WEST ELEVATION
A4.2 3/16" = 1'-0"

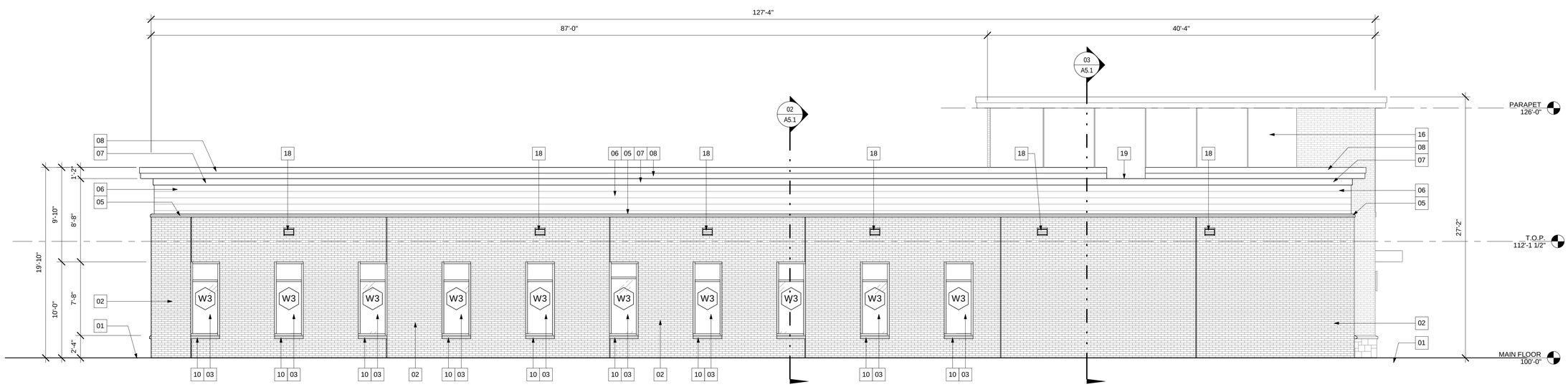

01 NORTH ELEVATION
A4.2 3/16" = 1'-0"

COPYRIGHT 2022 BAALMAN ARCHITECTS

BAALMAN ARCHITECTS
2 Daniel Dr.
OFallon, Mo 63366
ph: 314.640.6212

Michael J. Baalman
ARCHITECT
License#: A-2012004035
Certicicate of Authority: 2014003655

New Build Dentist Office For:
Hawk Ridge Dental Care
8631 HWY N
Lake Saint Louis, Missouri 63367

DATE	ISSUE	R#
03/17/2023	PERMIT & BID	1

STATE OF MISSOURI
MICHAEL J. BAALMAN
NUMBER A-2012004035
03-17-2023
ARCHITECT

Michael J. Baalman
ARCHITECT
License#: A-2012004035

PROJECT MANAGER: MJB
DRAWN BY: CJT

PROJECT NUMBER
21-042
DATE
03/17/2023

SHEET
A4.2
BUILDING ELEVATIONS

NEW WORK GENERAL NOTES

1. FIELD VERIFY ALL DIMENSIONS. IF DIMENSIONS VARY SIGNIFICANTLY NOTIFY THE ARCHITECT
2. DIMENSIONS ARE TO FACE OF SHEATHING UNLESS NOTED OTHERWISE.
3. REFER TO MANUFACTURER'S REQUIREMENTS FOR ALL OWNER PROVIDED EQUIPMENT ITEMS.
4. PROVIDE ELECTRIC, PLUMBING AND MECHANICAL SYSTEMS AS REQUIRED.
5. CONTRACTOR TO INSTALL ALL OWNER PROVIDED EQUIPMENT. VERIFY WITH OWNER.
6. LOCATE GYPSUM BOARD CONTROL JOINTS AT DOOR FRAMES WHEN POSSIBLE
7. PROVIDE CORNER GUARDS ON ALL OUTSIDE CORNERS WHERE APPLICABLE. VERIFY LOCATIONS WITH OWNER.

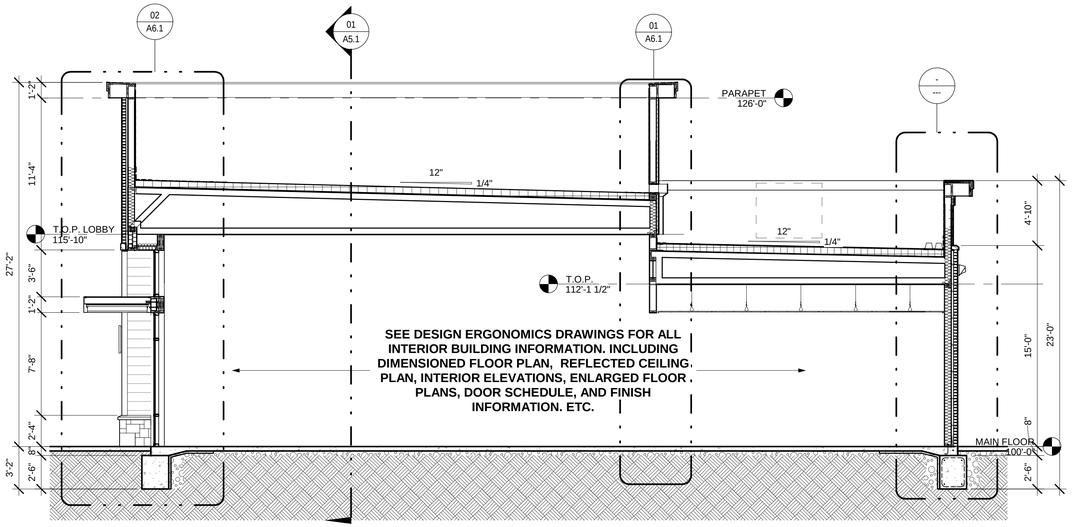

03 BUILDING CROSS-SECTION @ LOBBY NORTH / SOUTH

A5.1 3/16" = 1'-0"

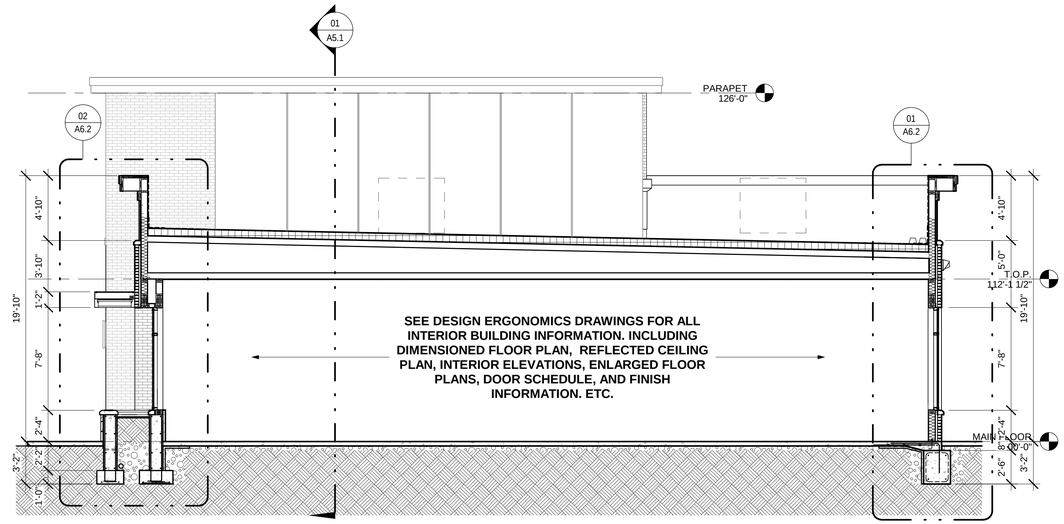

02 BUILDING CROSS-SECTION @ MAIN NORTH / SOUTH

A5.1 3/16" = 1'-0"

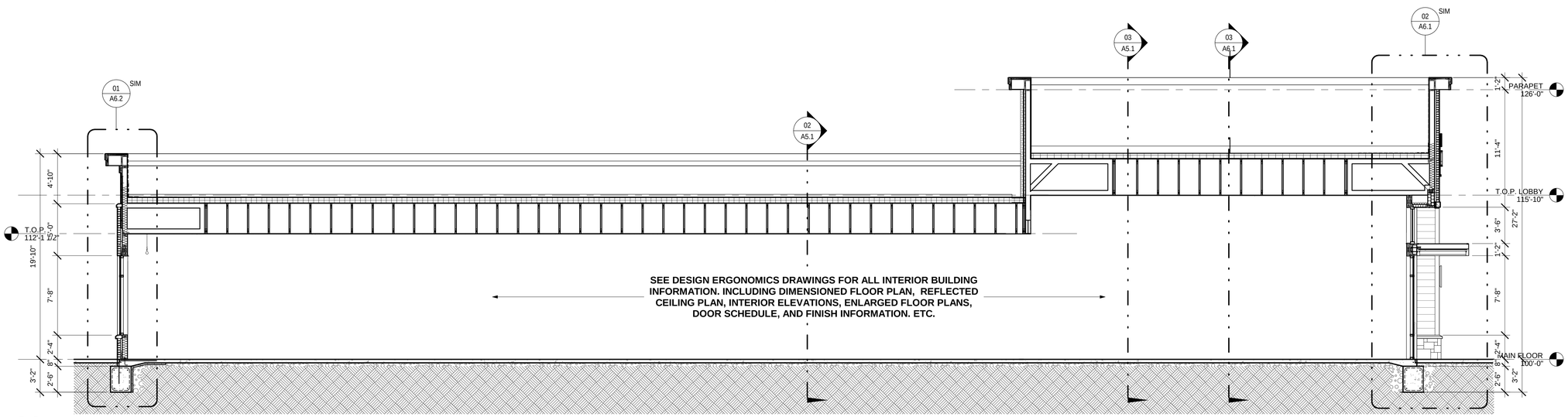

01 BUILDING CROSS-SECTION EAST / WEST

A5.1 3/16" = 1'-0"

COPYRIGHT 2022 BAALMAN ARCHITECTS

BAALMAN ARCHITECTS
2 Daniel Dr.
OFallon, Mo 63366
ph: 314.640.6212

Michael J. Baalman
ARCHITECT
License#: A-2012004035
Certicicate of Authority: 2014003655

New Build Dentist Office For:

Hawk Ridge Dental Care

8631 HWY N
Lake Saint Louis, Missouri 63367

DATE	ISSUE	R#
03/17/2023	PERMIT & BID	1

STATE OF MISSOURI
MICHAEL J. BAALMAN
NUMBER A-2012004035
03-17-2023
ARCHITECT

Michael J. Baalman
ARCHITECT
License#: A-2012004035

PROJECT MANAGER: MJB
DRAWN BY: CJT

PROJECT NUMBER
21-042
DATE
03/17/2023

SHEET
A5.1
BUILDING SECTIONS

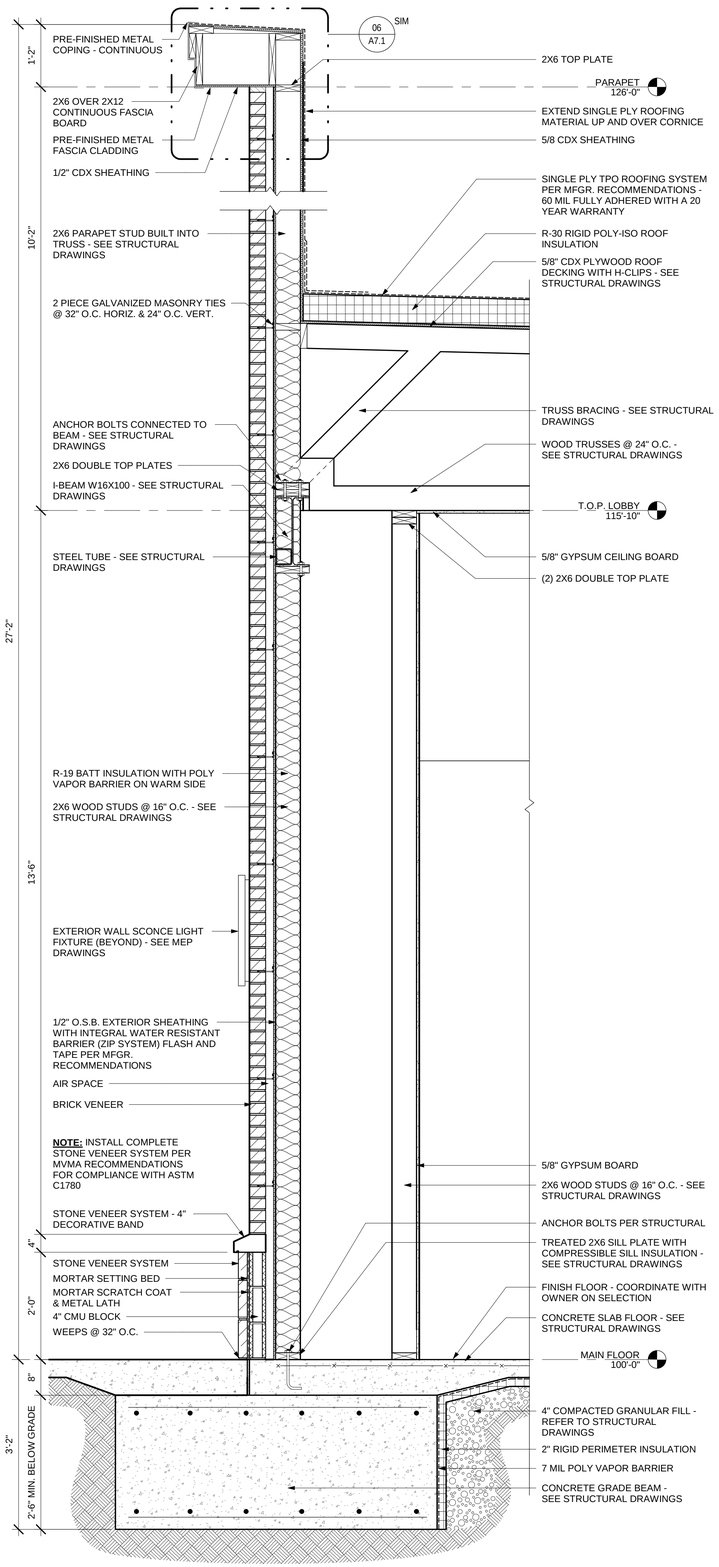

03 WALL SECT - LOBBY BUMP OUT

A6.1 3/4" = 1'-0"

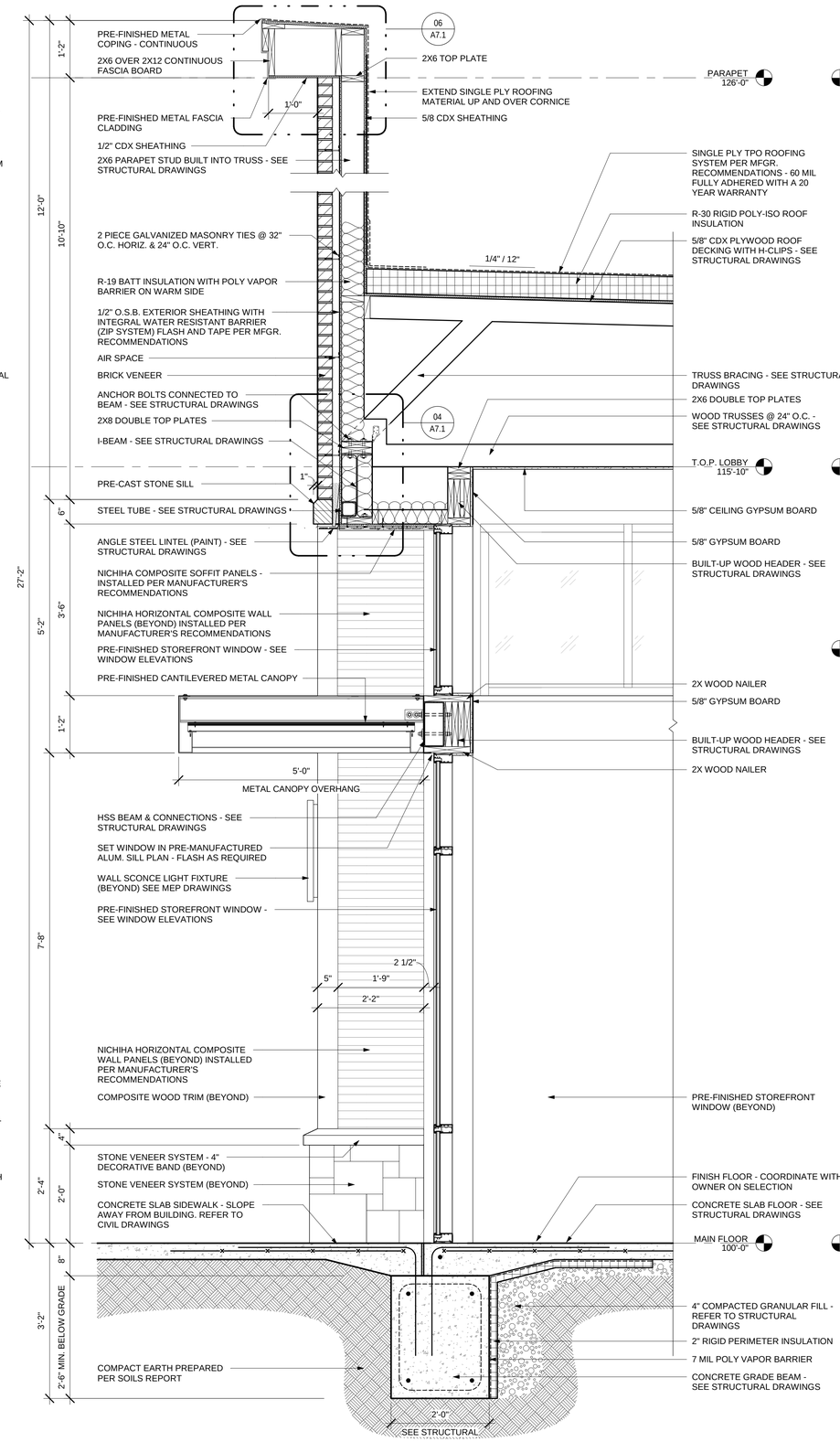

02 WALL SECT - LOBBY

A6.1 3/4" = 1'-0"

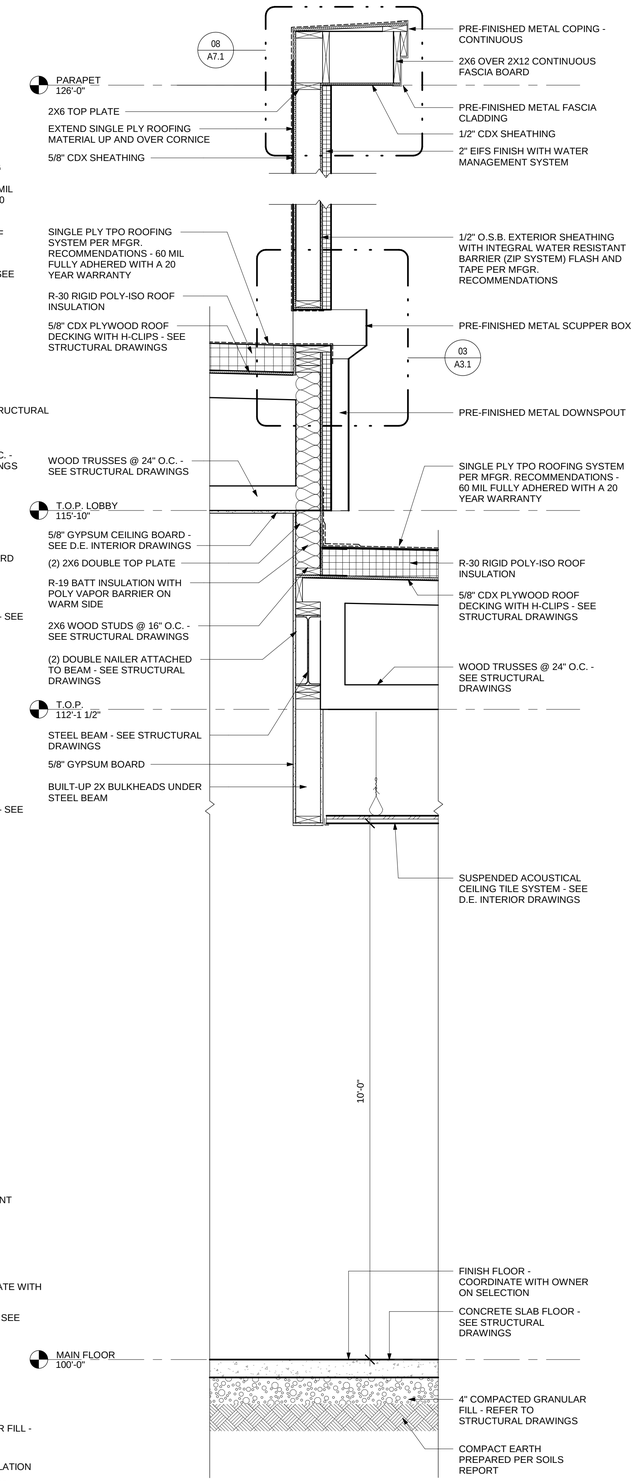

01 WALL SECT - HIGH/LOW CONNECTION

A6.1 3/4" = 1'-0"

COPYRIGHT 2022 BAALMAN ARCHITECTS

BAALMAN ARCHITECTS
2 Daniel Dr.
O'Fallon, Mo 63366
ph: 314.640.6212

Michael J. Baalman
ARCHITECT
License#: A-2012004035
Certificate of Authority: 2014003655

New Build Dentist Office For:

Hawk Ridge Dental Care

8631 HWY N
Lake Saint Louis, Missouri 63367

DATE	ISSUE	R#
03/17/2023	PERMIT & BID	1

STATE OF MISSOURI
MICHAEL J. BAALMAN
NUMBER A-2012004035
03-17-2023
ARCHITECT

Michael J. Baalman
ARCHITECT
License#: A-2012004035

PROJECT MANAGER: MJB
DRAWN BY: CJT

PROJECT NUMBER
21-042
DATE
03/17/2023

SHEET
A6.1
WALL SECTIONS

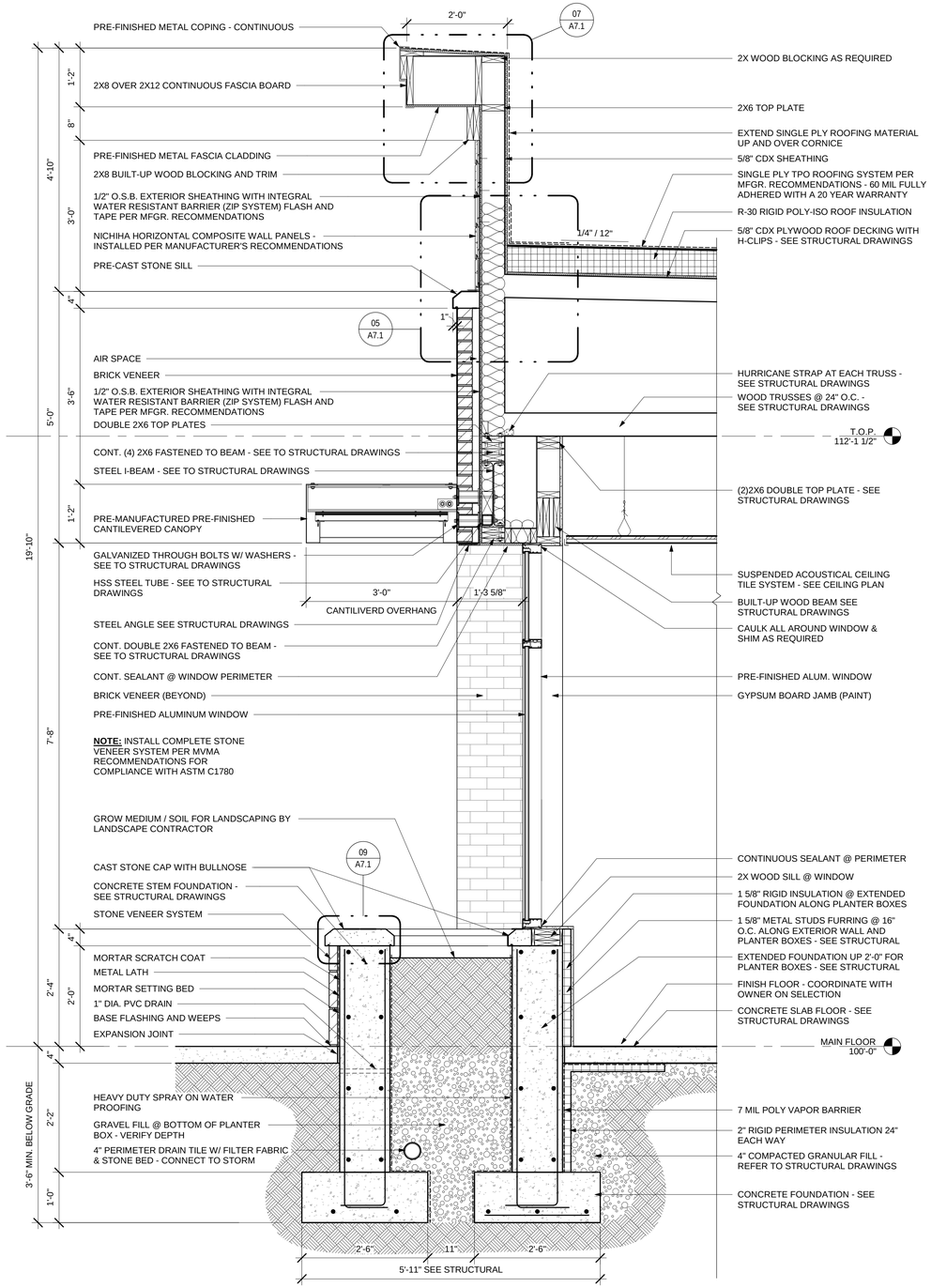

02 WALL SECT - PLANTER BED

A6.2 3/4" = 1'-0"

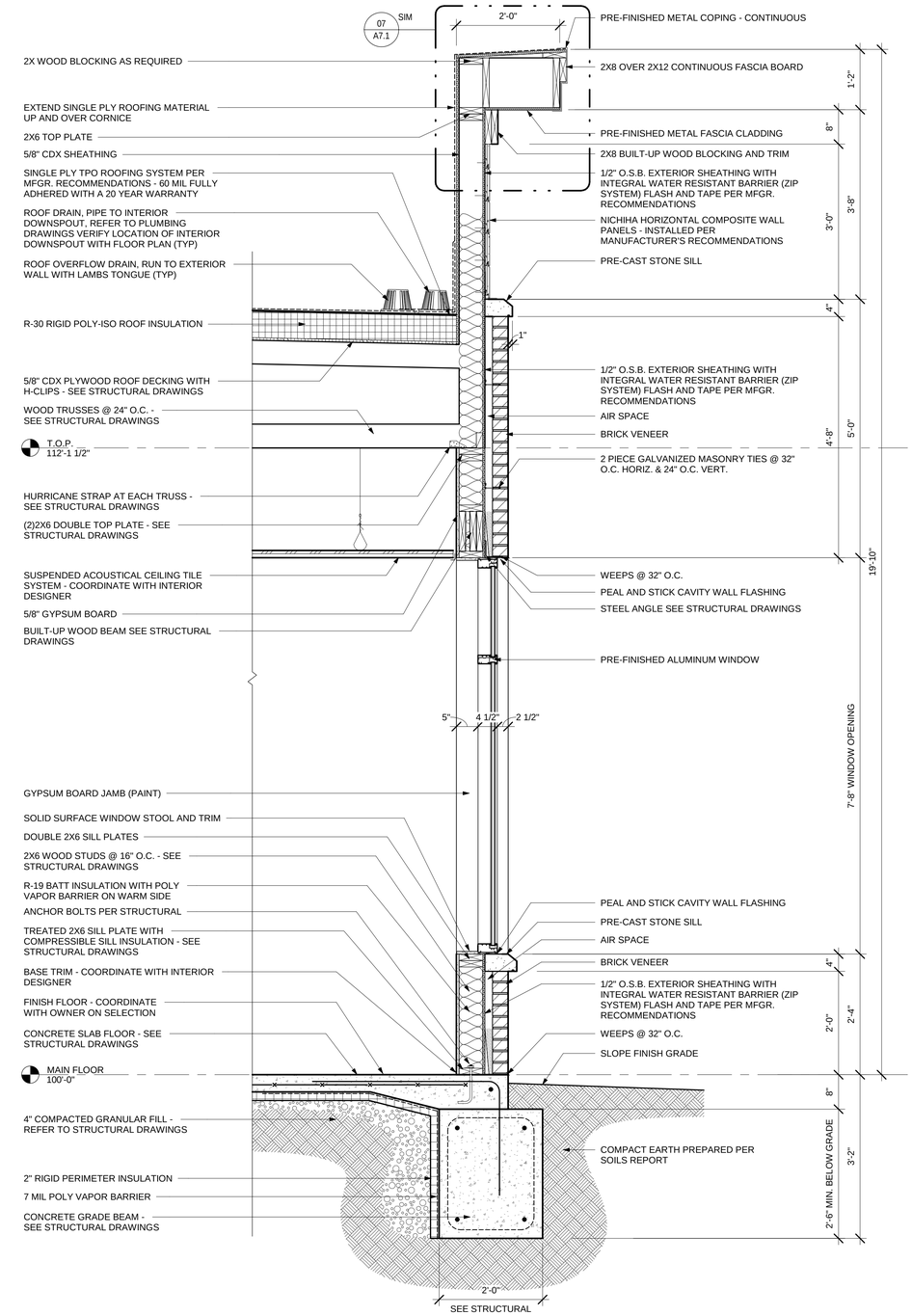

01 WALL SECT - TYP

A6.2 3/4" = 1'-0"

COPYRIGHT 2022 BAALMAN ARCHITECTS

BAALMAN ARCHITECTS
2 Daniel Dr.
OFallon, Mo 63366
ph: 314.640.6212

Michael J. Baalman
ARCHITECT
License#: A-2012004035
Certicicate of Authority:
2014003655

New Build Dentist Office For:

Hawk Ridge Dental Care

8631 HWY N
Lake Saint Louis, Missouri 63367

DATE	ISSUE	R#
03/17/2023	PERMIT & BID	1

STATE OF MISSOURI
MICHAEL J. BAALMAN
NUMBER A-2012004035
03-17-2023
ARCHITECT

Michael J. Baalman
ARCHITECT
License#: A-2012004035

PROJECT MANAGER: MJB
DRAWN BY: CJT

PROJECT NUMBER
21-042
DATE
03/17/2023

SHEET
A6.2
WALL SECTIONS

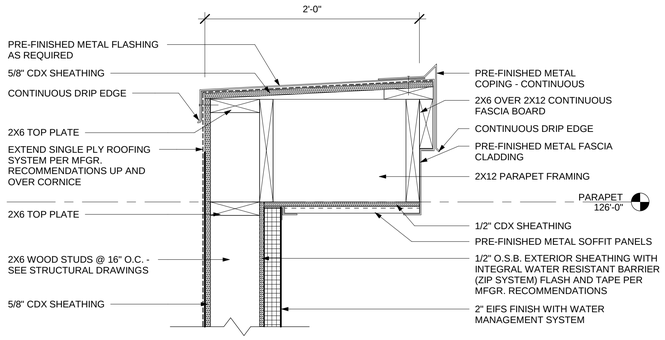

08 DTL SECT - PARAPET @ EIFS

A7.1 1 1/2" = 1'-0"

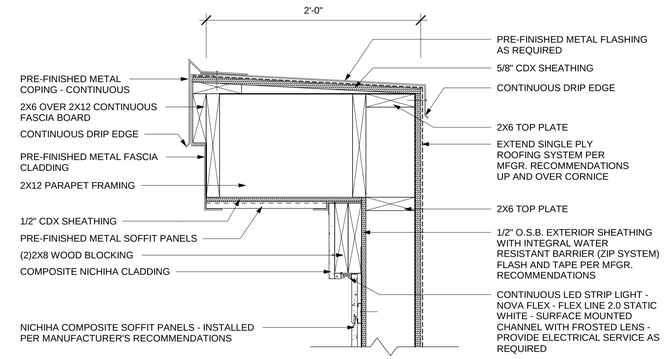

07 DTL SECT - PARAPET @ COMPOSITE PANELING

A7.1 1 1/2" = 1'-0"

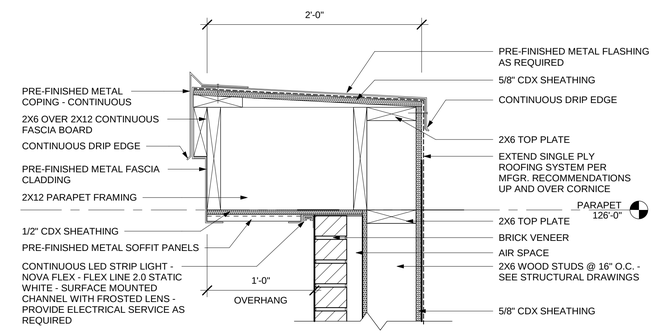

06 DTL SECT - PARAPET @ BRICK

A7.1 1 1/2" = 1'-0"

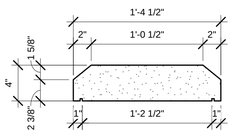

09 DTL SECT - PLANTER SILL

A7.1 1 1/2" = 1'-0"

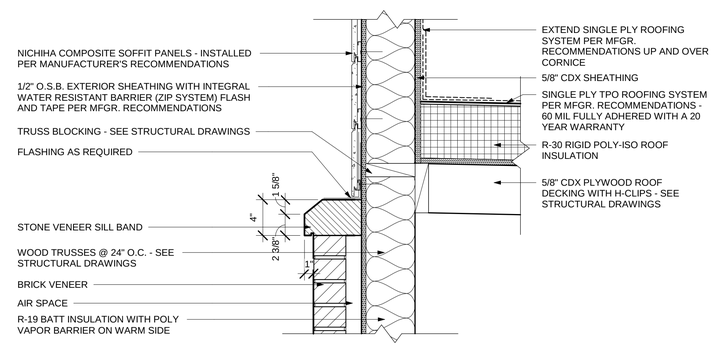

05 DTL SECT - COMPOSITE PANELING TRANSITION

A7.1 1 1/2" = 1'-0"

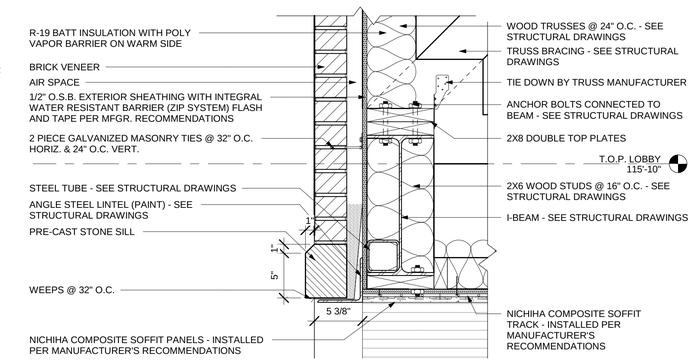

04 DTL SECT - ENTRY SOFFIT

A7.1 1 1/2" = 1'-0"

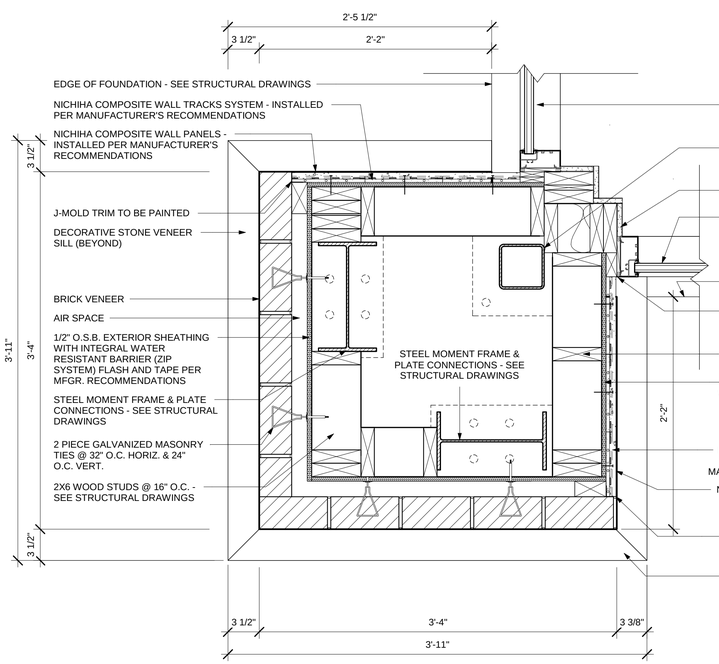

03 PLAN DTL - PILASTER CORNER

A7.1 1 1/2" = 1'-0"

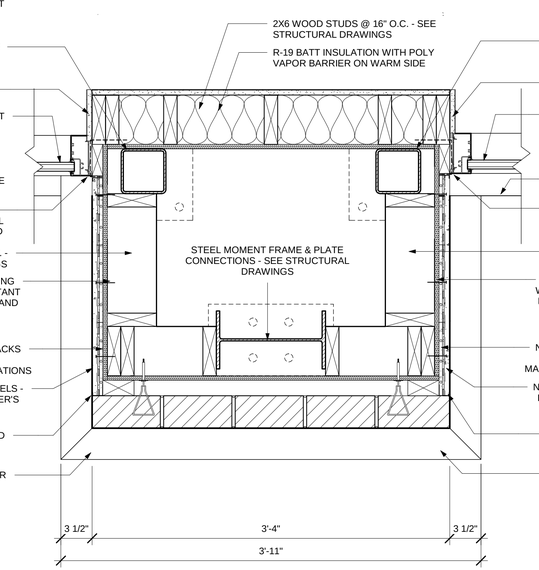

02 PLAN DTL - PILASTER CENTER

A7.1 1 1/2" = 1'-0"

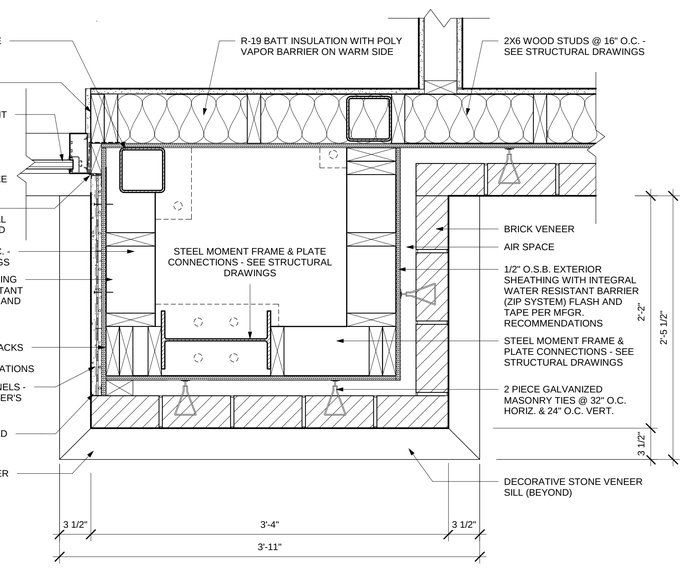

01 PLAN DTL - PILASTER EDGE

A7.1 1 1/2" = 1'-0"

COPYRIGHT 2022 BAALMAN ARCHITECTS

BAALMAN ARCHITECTS
2 Daniel Dr.
O'Fallon, Mo 63366
ph: 314.640.6212

Michael J. Baalman
ARCHITECT
License#: A-2012004035
Certificate of Authority: 2014003655

New Build Dentist Office For:

Hawk Ridge Dental Care

8631 HWY N
Lake Saint Louis, Missouri 63367

DATE	ISSUE	R#
03/17/2023	PERMIT & BID	1

STATE OF MISSOURI
MICHAEL J. BAALMAN
NUMBER A-2012004035
ARCHITECT
03-17-2023

Michael J. Baalman
ARCHITECT
License#: A-2012004035

PROJECT MANAGER: MJB
DRAWN BY: CJT

PROJECT NUMBER
21-042
DATE
03/17/2023

SHEET
A7.1
DETAIL SECTIONS

04 NORTHEAST PERSPECTIVE - FOR REFERENCE ONLY

A8.1 12" = 1'-0"

03 NORTHWEST PERSPECTIVE - FOR REFERENCE ONLY

A8.1 12" = 1'-0"

02 SOUTHEAST PERSPECTIVE - FOR REFERENCE ONLY

A8.1 12" = 1'-0"

01 SOUTHWEST PERSPECTIVE - FOR REFERENCE ONLY

A8.1 12" = 1'-0"

COPYRIGHT 2022 BAALMAN ARCHITECTS

BAALMAN
ARCHITECTS

2 Daniel Dr.
OFallon, Mo 63366
ph: 314.640.6212

Michael J. Baalman
ARCHITECT
License#: A-2012004035
Certicicate of Authority:
2014003655

New Build Dentist Office For:

Hawk Ridge Dental Care

8631 HWY N
Lake Saint Louis, Missouri 63367

DATE	ISSUE	R#
03/17/2023	PERMIT & BID	1

STATE OF MISSOURI
MICHAEL J. BAALMAN
NUMBER
A-2012004035
03-17-2023
ARCHITECT

Michael J. Baalman
ARCHITECT
License#: A-2012004035

PROJECT MANAGER: MJB
DRAWN BY: CJT

PROJECT NUMBER
21-042

DATE
03/17/2023

SHEET
A8.1
RENDERINGS

Mechanical - Electrical - Plumbing Design Drawings for

Hawk Ridge Dental Care

8625 HWY N
Lake Saint Louis, MO 63367

GENERAL MEP SPECIFICATIONS

1. IT IS THE RESPONSIBILITY OF THE CONTRACTOR TO REVIEW AND UNDERSTAND ALL DRAWINGS AND SPECIFICATIONS IN THE CONTRACT DOCUMENTS. EACH CONTRACTOR IS RESPONSIBLE FOR ALL WORK ASSOCIATED WITH HIS TRADE REGARDLESS OF WHERE THE WORK IS DEPICTED IN THE DRAWINGS OR SPECIFICATIONS.
2. THE LAYOUT OF SYSTEMS SHOWN ON PLANS ARE APPROXIMATE AND WILL NEED TO BE COORDINATED IN FIELD. THE CONTRACTOR SHALL INCLUDE THIS COORDINATION IN HIS SCOPE AND INCLUDE ALL COSTS OF MODIFYING THE LAYOUT AS REQUIRED IN HIS BID.
3. THE CONTRACTOR IS RESPONSIBLE FOR PROVIDING ALL NECESSARY PARTS AND LABOR TO PRODUCE A COMPLETE AND FULLY OPERATIONAL SYSTEM UNLESS STATED OTHERWISE ON PLANS.
4. ALL MATERIALS TO BE NEW, FIRST CLASS, AND INSTALLED PER MANUFACTURE'S PUBLISHED INSTRUCTIONS.
5. ALL WORK SHALL BE PERFORMED IN COMPLIANCE WITH LOCALLY ADOPTED CODES AND ORDINANCES.
6. CONTRACTOR IS RESPONSIBLE FOR COORDINATING EQUIPMENT LOCATIONS AND SYSTEM ROUTING WITH OTHER TRADES PRIOR TO INSTALLATION.
7. CONTRACTOR TO GUARANTEE ALL MATERIALS AND WORKMANSHIP FOR A PERIOD OF ONE YEAR FROM THE DATE THE PROJECT IS TURN OVER TO THE OWNER, UNLESS NOTED OTHERWISE.
8. CONTRACTOR IS TO INCLUDE IN THEIR SCOPE THE COST OF ALL PERMITS, INSPECTIONS, METERING, AND TAPS ASSOCIATED WITH THEIR WORK.
9. CONTRACTOR IS RESPONSIBLE FOR ALL EXCAVATION, CUTTING, CORING, PATCHING, AND BACKFILL REQUIRED TO COMPLETE THEIR WORK, UNLESS NOTED OTHERWISE.
10. THESE PLANS ARE NOT TO BE SCALED. SEE ARCHITECTURAL PLANS FOR DIMENSIONS. WHERE THERE IS A CONFLICT BETWEEN ARCHITECTURAL DIMENSIONS AND MEP DIMENSION, ARCHITECTURAL SHALL GOVERN.
11. SEE DISCIPLINE SHEETS FOR ADDITIONAL DISCIPLINE SPECIFIC SPECIFICATIONS.

REFERENCED CODES IN EFFECT

2015 INTERNATIONAL MECHANICAL CODE

2015 INTERNATIONAL PLUMBING CODE

2015 INTERNATIONAL FUEL GAS CODE

2015 INTERNATIONAL FIRE CODE

2014 NATIONAL ELECTRIC CODE

2015 INTERNATIONAL ENERGY CONSERVATION CODE

Sheet List Table

Sheet Number	Sheet Title
MEP1	MECHANICAL ELECTRICAL PLUMBING COVER SHEET
MEP2	SITE UTILITIES PLAN
MEP3	ROOF PLAN
M101	HVAC PLAN
M501	HVAC DETAILS
M601	HVAC SCHEDULES
EP101	POWER PLAN
EL101	LIGHTING PLAN
EL102	SOFFIT & PARAPET LIGHTING PLAN
E501	ELECTRICAL DETAILS
E601	ELECTRICAL SCHEDULES
PS101	SANITARY SEWER PLAN
PW101	WATER & GAS PLAN
PD101	AIR, VAC, & DENTAL GAS PLAN
P501	PLUMBING DETAILS & SCHEDULES

STATE OF MISSOURI
KEATON E. LEISINGER
NUMBER PE-2021035875
PROFESSIONAL ENGINEER

Keaton E. Leisinger, P.E. Mar. 17th, 2023
PE-2021035875
MO Certificate of Authority # 2018029680

J-SQUARED ENGINEERING
2400 Bluff Creek Drive, Suite 101
Columbia, Missouri 65201
573 - 234 - 4492 phone
www.j-squaredeng.com

J2 PROJECT No:	J20930
J2 DESIGN:	KEL

ISSUE TITLE	DATE
PERMIT SET	3 - 17 - 2023

Mechanical - Electrical - Plumbing Design Drawings for
Hawk Ridge Dental Care
8625 HWY N
Lake Saint Louis, MO 63367

SHEET TITLE

MECHANICAL ELECTRICAL PLUMBING COVER SHEET

SHEET NUMBER

MEP1

SITE PLAN SYMBOL LEGEND

- SANITARY SEWER PIPING
- COLD WATER LINE
- WATER METER
- VALVE
- GAS LINE
- GAS METER
- TIE INTO EXISTING
- ELECTRIC
- CIRCUIT WIRING
- PX-XX — CIRCUIT TAG
- X1 — "X1" INDICATES FIXTURE TYPE (REFER TO SCHEDULE)
  POLE LIGHT
  ARROW INDICATES FORWARD AIMING DIRECTION
- 1.1 — PHOTOMETRIC CALCULATIONS (IN FOOT-CANDLES)

SITE UTILITIES PLAN GENERAL NOTES:

1. REFER TO CIVIL PLANS FOR EXACT UTILITY LOCATIONS, CONNECTIONS, DETAILS, ETC.

SITE UTILITIES PLAN KEY NOTES:

1. SEE CIVIL PLAN FOR SANITARY SEWER CONTINUATION.
2. SEE CIVIL PLAN FOR WATER METER LOCATION & WATER SERVICE CONTINUATION.
3. SEE CIVIL PLAN FOR ELECTRIC SERVICE CONTINUATION. SEE E501 FOR POWER RISER DETAILS.
4. SEE CIVIL PLAN FOR GAS SERVICE CONTINUATION.
5. STORM SEWER PIPING. SEE CIVIL PLAN FOR STORM SEWER CONTINUATION.
6. SEE SHEET EL101 FOR WALL PACK INFORMATION.

POLE HEIGHT	"X" DEPTH
21ft - 25ft	7'-0"
10ft	4'-6"

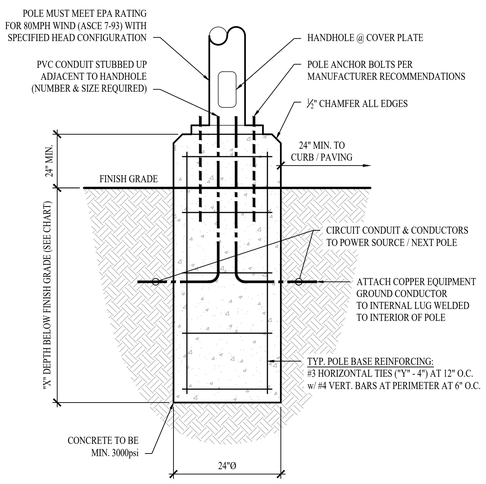

TYP. LIGHT POLE DETAIL - 1

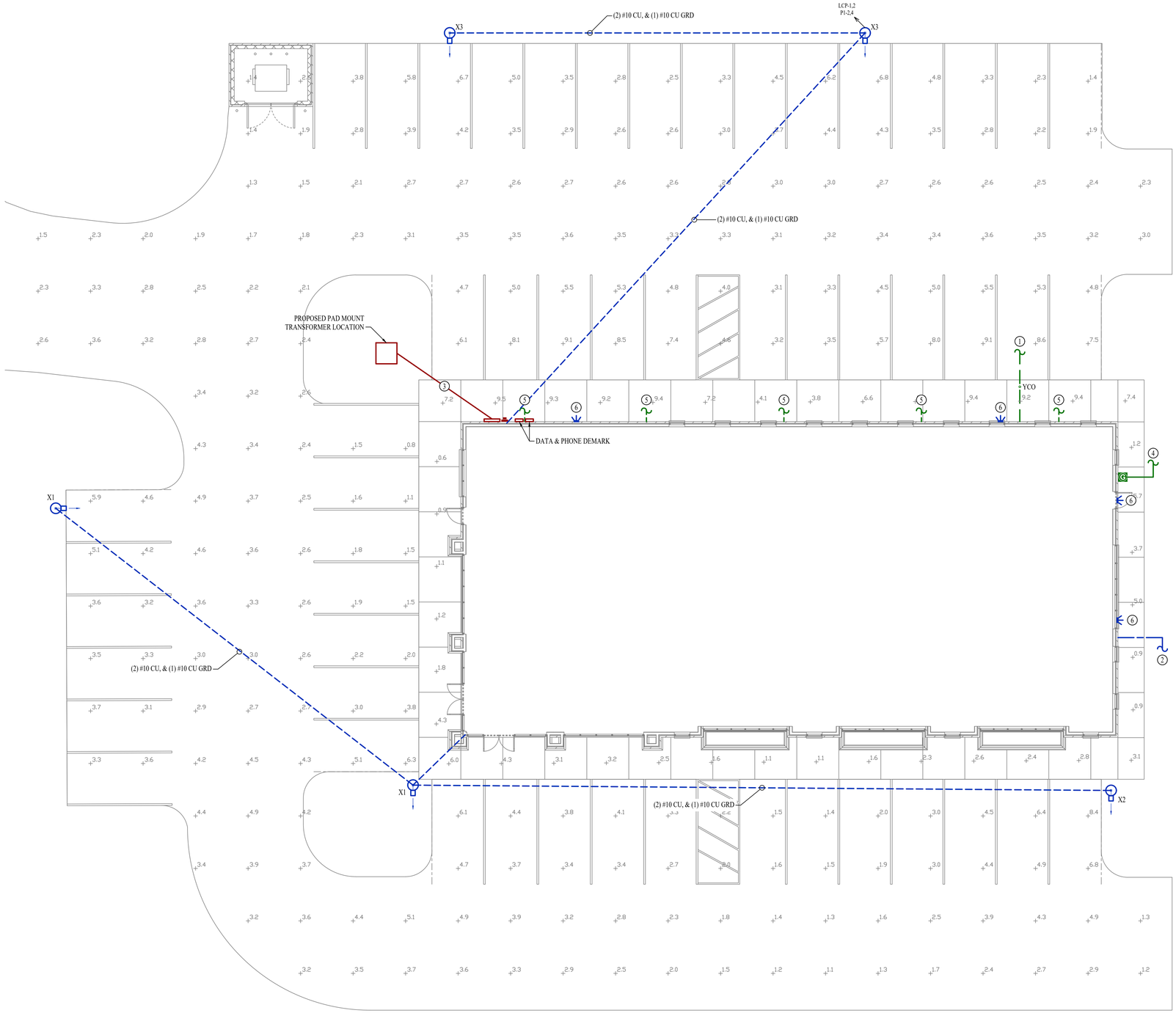

SITE UTILITIES PLAN

SCALE: 1" = 10 ft

STATE OF MISSOURI
KEATON E. LEISINGER
NUMBER PE-2021035875
PROFESSIONAL ENGINEER

Keaton E. Leisinger, P.E. Mar. 17th, 2023
PE-2021035875
MO Certificate of Authority # 2018029680

J-SQUARED ENGINEERING
2400 Bluff Creek Drive, Suite 101
Columbia, Missouri 65201
573 - 234 - 4492 phone
www.j-squaredeng.com

J2 PROJECT No:	J20930
J2 DESIGN:	KEL

ISSUE TITLE	DATE
PERMIT SET	3 - 17 - 2023

Mechanical - Electrical - Plumbing Design Drawings for
Hawk Ridge Dental Care
8625 HWY N
Lake Saint Louis, MO 63367

SHEET TITLE
SITE UTILITIES PLAN

SHEET NUMBER
MEP2

ROOF PLAN SYMBOL LEGEND

- EQUIPMENT TYPE (REFER TO EQUIPMENT SCHEDULE)
- EQUIPMENT REFERENCE NUMBER
- PX-XX — CIRCUIT TAG
- DISCONNECT
- SWITCH
- WP — GFCI DUPLEX CONVENIENCE RECEPTACLE (WEATHER PROOF OUTDOOR RECEPTACLE)
- GAS LINE
- VALVE

ROOF PLAN GENERAL NOTES:

1. SEE M500 & M600 SERIES SHEETS FOR ADDITIONAL HVAC NOTES, DETAIL, AND SCHEDULES.
2. SEE SHEETS E501 & E601 FOR ADDITIONAL ELECTRICAL NOTES, DETAILS, AND SCHEDULES.

ROOF PLAN KEY NOTES:

1. EXTERIOR SUPPLY & RETURN DUCTWORK TO PENETRATE WALL. RUN DUCTWORK IN ROOF TRUSS SPACE.
2. 8x8 SUPPLY DUCT DOWN THRU ROOF. SEE SHEET M101 FOR CONTINUATION.

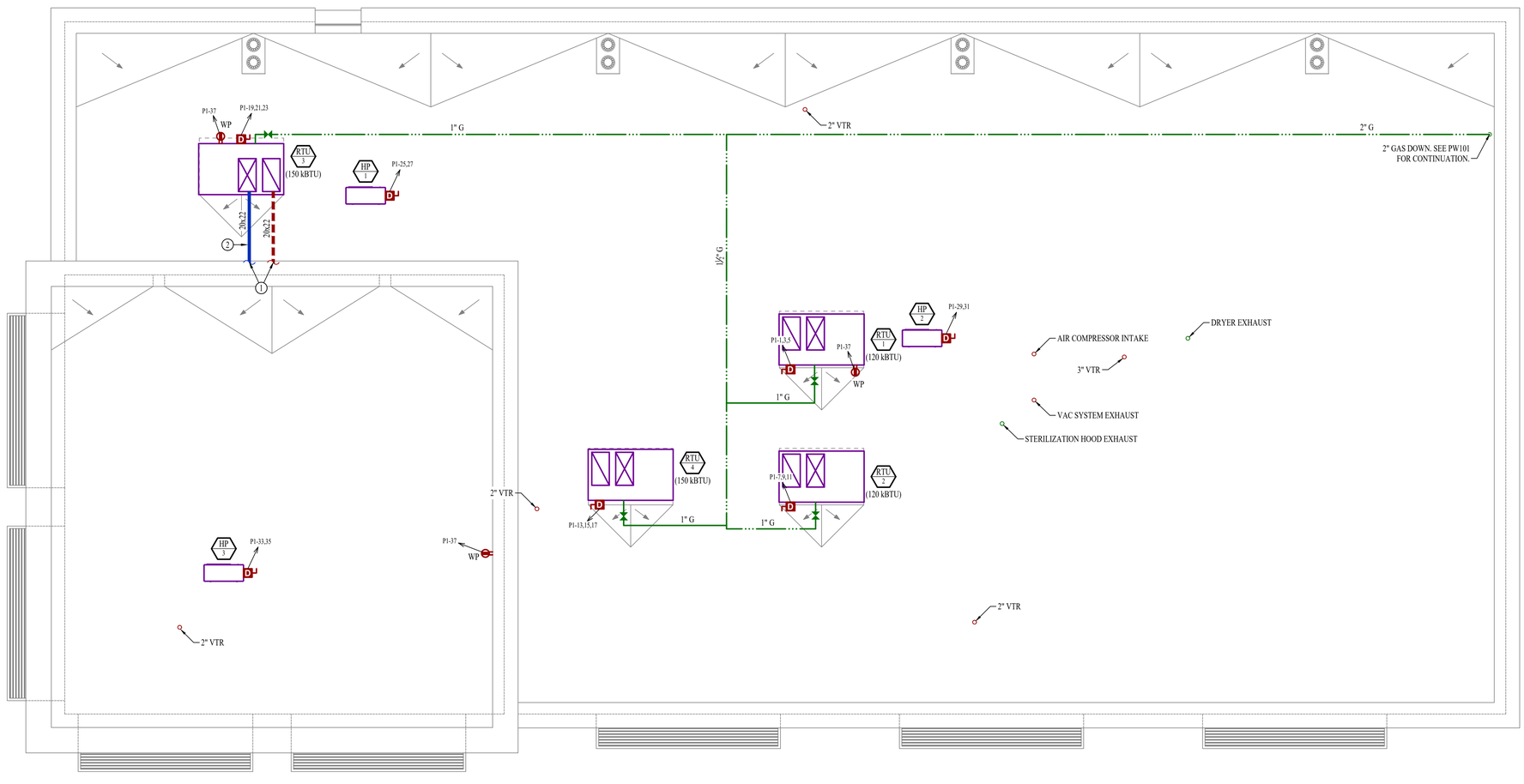

ROOF PLAN

SCALE: 3/16" = 1'-0"

STATE OF MISSOURI
KEATON E. LEISINGER
NUMBER PE-2021035875
PROFESSIONAL ENGINEER

Keaton E. Leisinger, P.E. Mar. 17th, 2023
PE-2021035875
MO Certificate of Authority # 2018029680

J-SQUARED ENGINEERING
2400 Bluff Creek Drive, Suite 101
Columbia, Missouri 65201
573 - 234 - 4492 phone
www.j-squaredeng.com

J2 PROJECT No:	J20930
J2 DESIGN:	KEL

ISSUE TITLE	DATE
PERMIT SET	3 - 17 - 2023

Mechanical - Electrical - Plumbing Design Drawings for

Hawk Ridge Dental Care

8625 HWY N
Lake Saint Louis, MO 63367

SHEET TITLE

ROOF PLAN

SHEET NUMBER

MEP3

HVAC PLAN SYMBOL LEGEND

- EQUIPMENT TYPE (REFER TO EQUIPMENT SCHEDULE)
- EQUIPMENT REFERENCE NUMBER
- DIFFUSER/GRILLE TYPE (REFER TO SCHEDULE)
- CUBIC FEET PER MINUTE (CFM) / FACE SIZE
- SUPPLY DUCTWORK
- RETURN DUCTWORK
- EXHAUST DUCTWORK
- OUTSIDE AIR DUCTWORK
- FLEX DUCT
- VENT / COMBUSTION AIR
- CONDENSATION LINE
- REFRIGERANT LINE
- TIE INTO EXISTING
- SUPPLY DIFFUSER (HATCH INDICATES "NO FLOW ZONE")
- RETURN DIFFUSER
- BALANCE DAMPER
- MOTORIZED DAMPER
- CEILING RADIATION DAMPER
- FIRE RATED DAMPER
- SMOKE DAMPER
- THERMOSTAT
- CO2 DETECTOR
- DS RETURN DUCT SMOKE DETECTOR WIRED TO FAN STARTER TO SHUT UNIT(S) DOWN AND SEND ALARM SIGNAL TO FIRE ALARM SYSTEM (IF PRESENT) OR TO REMOTE SOUNDER LOCATED IN AN OCCUPIED SPACE (EQUAL TO SYSTEM SENSOR #D4120)
- RS REMOTE SOUNDER WIRED TO RETURN DUCT SMOKE DETECTOR (EQUAL TO SYSTEM SENSOR #MHW)

HVAC PLAN GENERAL NOTES:

1. SEE SHEETS M501 & M601 FOR ADDITIONAL HVAC NOTES, DETAIL, AND SCHEDULES.

HVAC PLAN KEY NOTES:

1. SUPPLY & RETURN DUCTWORK THROUGH SIDEWALL. SEE SHEET MEP3 FOR CONTINUATION.
2. SUPPLY & RETURN DUCTWORK UP TO RTU. SEE SHEET MEP3 FOR UNIT NUMBER.
3. 8x8 SUPPLY DUCTWORK UP TO RTU. SEE SHEET MEP3.
4. TERMINATE CONDENSATE DRAIN INTO HUB DRAIN. COORDINATE WITH PLUMBING CONTRACTOR FOR EXACT PLACEMENT. SEE HUB DRAIN DETAIL FOR MORE INFORMATION.
5. RANGE HOOD PROVIDED BY CONTRACTOR. COORDINATE EXACT SIZE WITH STERILIZATION CABINET PROVIDER. 4" DUCT UP THROUGH ROOF EQUAL TO ROOFGOOSEVENT #RG4-IE.
6. DRYER BOX WITH PLACARD INDICATING "RISK OF FIRE. THE NET EQUIVALENT LENGTH OF DRYER DUCT FROM THIS LOCATION IS 20 FT." PROVIDE DRYER CAPABLE OF VENTING EQUAL OR GREATER THEN TOTAL DEVELOPED LENGTH. DRYER DUCT UP THROUGH ROOF, EQUAL TO ROOFGOOSEVENT #RG4-DRYER.

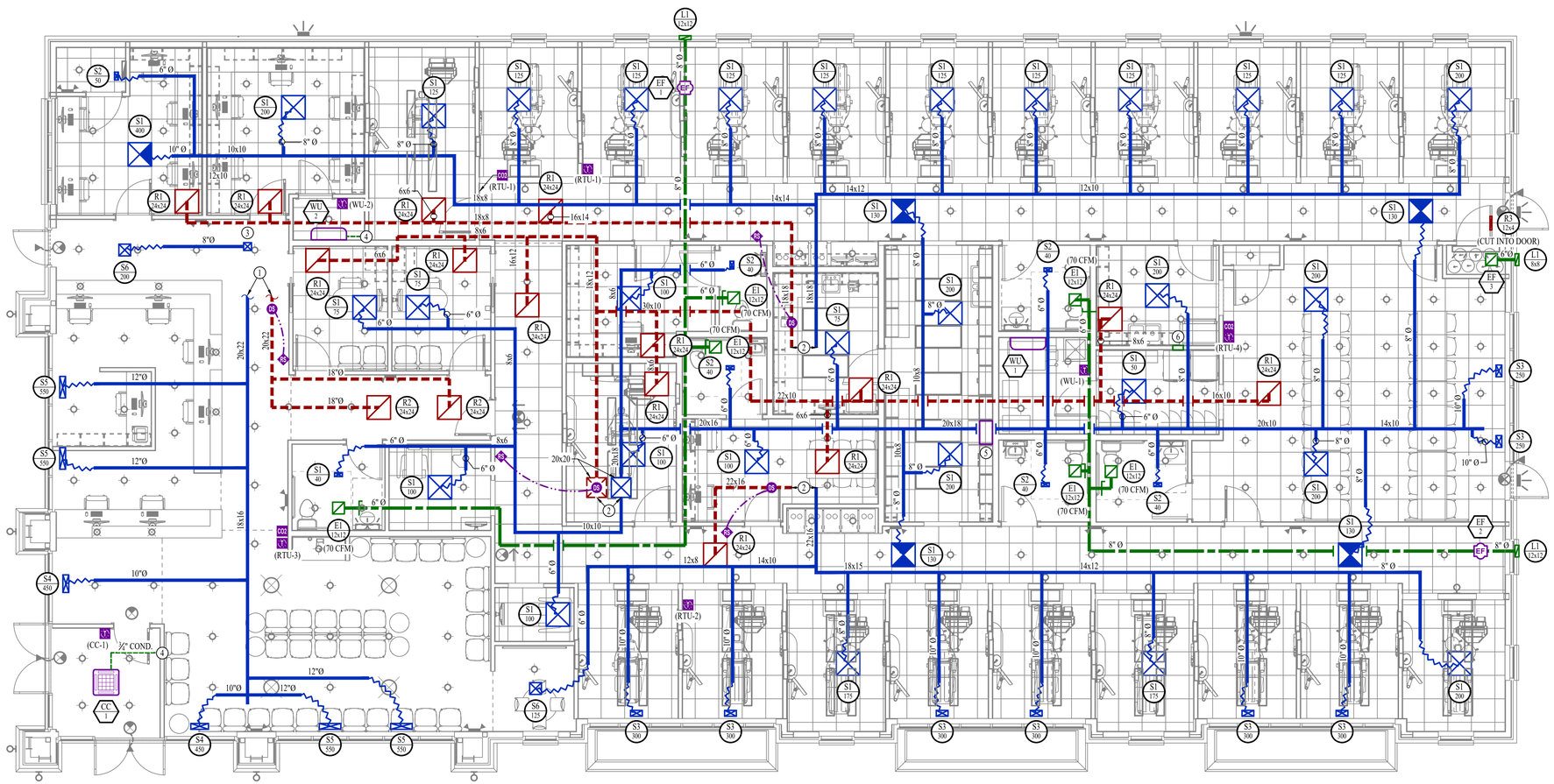

HVAC PLAN

SCALE: 3/16" = 1'-0"

STATE OF MISSOURI
KEATON E. LEISINGER
NUMBER PE-2021035875
PROFESSIONAL ENGINEER

Keaton E. Leisinger, P.E. Mar. 17th, 2023
PE:2021035875
MO Certificate of Authority # 2018029680

J-SQUARED ENGINEERING
2400 Bluff Creek Drive, Suite 101
Columbia, Missouri 65201
573 - 234 - 4492 phone
www.j-squaredeng.com

J2 PROJECT No:	J20930
J2 DESIGN:	KEL

ISSUE TITLE	DATE
PERMIT SET	3 - 17 - 2023

Mechanical - Electrical - Plumbing Design Drawings for

Hawk Ridge Dental Care

8625 HWY N
Lake Saint Louis, MO 63367

SHEET TITLE

HVAC PLAN

SHEET NUMBER

M101

HVAC SPECIFICATIONS

1. EQUIPMENT
   - 1.1. ALL EQUIPMENT MUST PROVIDE THE PERFORMANCE SPECIFIED ON PLANS. WHERE SPECIFIC MAKES AND MODELS ARE INDICATED ON PLAN, CONTRACTOR TO PROVIDE MODEL INDICATED OR APPROVED EQUAL.
   - 1.2. CONTRACTOR TO SUPPLY SUBMITTALS FOR ALL EQUIPMENT FOR REVIEW BY ARCHITECT AND ENGINEER PRIOR TO PURCHASE,
   - 1.3. ALL HORIZONTAL FURNACES WITH AC COILS TO BE EQUIPPED WITH CORROSION RESISTANT DRAIN PAIN. DRAIN PAN TO DISCHARGE TO SANITARY WASTE VIA INDIRECT CONNECTION WITH AIR GAP. DRAIN PAN TO PROVIDE SECONDARY OVERFLOW OR FLOAT SWITCH INTERLOCKED WITH UNIT TO SHUT DOWN UNIT ON HIGH WATER SIGNAL.
   - 1.4. ALL EXTERIOR REFRIGERANT COILS TO BE PROTECTED BY FACTORY EQUIPPED HAIL GUARDS.
   - 1.5. REFRIGERANT PIPING TO BE ACR COPPER OR TYPE L COPPER.
2. DUCTWORK
   - 2.1. DUCTWORK TO BE GALVANIZED STEEL, SEAL CLASS B, CONSTRUCTED PER SMACNA STANDARDS.
   - 2.2. 26 GA. MINIMUM UP TO 16" DUCT, 24 GA. UP TO 20", 22 GA. UP TO 24", 20 GA. UP TO 28", AND 18 GA. UP TO 36".
   - 2.3. TURNING VANES TO BE PROVIDED AND INSTALLED AT ALL 90° BENDS AND TEES.
   - 2.4. DUCT DIMENSIONS LISTED ARE TO INTERIOR OF DUCT LINER.
   - 2.5. BALANCE DAMPERS MUST BE PROVIDED TO ALLOW ADJUSTMENT AT EACH AIR TERMINAL.
     - 2.5.1. WHERE BRANCH TAKEOFF IS ACCESSIBLE (ABOVE LAY-IN CEILING OR EXPOSED DUCT), THE BALANCE DAMPER IS TO BE INSTALLED AT TAKEOFF.
     - 2.5.2. WHERE TAKEOFF IS INACCESSIBLE (IN ATTIC OR SOFFIT), THE BALANCE DAMPER IS TO BE LOCATED SO IT IS ACCESSIBLE FROM FACE OF AIR DEVICE.
   - 2.6. HVAC CONTRACTOR RESPONSIBLE FOR ALL DUCTWORK TRANSITIONS AND FITTINGS AS REQUIRED FOR FINAL CONNECTIONS TO HVAC EQUIPMENT.
3. INSULATION
   - 3.1. DUCTWORK
     - 3.1.1. SEE "TYPICAL DUCT INSULATION DIAGRAM" FOR INSTALLATION SPECIFIC REQUIREMENTS.
     - 3.1.2. INTERNAL DUCT LINER TO BE EQUAL TO 'JOHNS MANVILLE LINACOUSTIC R-300'.
     - 3.1.3. EXTERNAL DUCT WRAP TO INCLUDE VAPOR BARRIER. EQUAL TO 'JOHNS MANVILLE MICROLITE' WITH FSK JACKET.
   - 3.2. REFRIGERANT PIPING
     - 3.2.1. REFRIGERANT PIPING SHALL BE TYPE ACR OR TYPE L COPPER.
     - 3.2.2. SPLIT SYSTEM (SUCTION LINE ONLY) - 1" CLOSED CELL ELASTOMERIC FOAM (EQUAL TO 'ARMAFLEX AP').
   - 3.3. VRV/VRF SYSTEMS (BOTH SUCTION AND HOT GAS LINES) 1 ½" EPDM (EQUAL TO 'AEROFLEX AEROCEL AC') WITHIN CONDITIONED SPACES & 2" EDPM (EQUAL TO 'AEROFLEX AEROCEL AC') IN UNCONDITIONED SPACES, AND WITH BANDED ALUMINUM SHIELDING IN EXTERIOR SPACES.
   - 3.4. CONDENSATE PIPING
     - 3.4.1. SPLIT SYSTEMS - WHERE CONDENSATE PIPING IS LOCATED IN UNCONDITIONED SPACE, INSULATE WITH ½" ELASTOMERIC. NO INSULATION REQUIRED IN CONDITIONED SPACES.
     - 3.4.2. VRV/VRF - INSULATE WITH ½" ELASTOMERIC.
4. WORKMANSHIP
   - 4.1. COORDINATE WITH OTHER TRADES SO THAT HVAC EQUIPMENT AND DUCT WORK DOES NOT BLOCK REQUIRED ACCESS OR CLEARANCE TO EQUIPMENT.
   - 4.2. ALL HVAC EQUIPMENT IS TO BE INSTALLED PER MANUFACTURER'S PUBLISHED RECOMMENDATIONS.
   - 4.3. ALL EQUIPMENT TO BE INSTALLED LEVEL AND PLUMB.
   - 4.4. ROOFTOP MOUNTED RTUS TO BE INSTALLED ON CURBS PER MANUFACTURES INSTRUCTIONS.
   - 4.5. GRADE MOUNTED RTUS, CONDENSING UNITS, AND HEAT PUMPS TO BE INSTALLED ON 4" REINFORCED CONCRETE PAD EXTENDING 4" BEYOND EACH EDGE OF THE EQUIPMENT, OR A MANUFACTURER APPROVED PRE-MANUFACTURED BASE.
5. TESTING AND BALANCING
   - 5.1. ALL SYSTEMS MUST BE BALANCED TO WITHIN 10% OF VALUES INDICATED ON PLAN.
   - 5.2. HVAC CONTRACTOR TO PROVIDE WRITTEN BALANCE REPORT INCLUDING FLOW VALUES INDICATED ON PLAN AND ACTUAL MEASURED VALUES.
   - 5.3. THIRD PARTY CERTIFIED TEST AND BALANCE NOT REQUIRED.

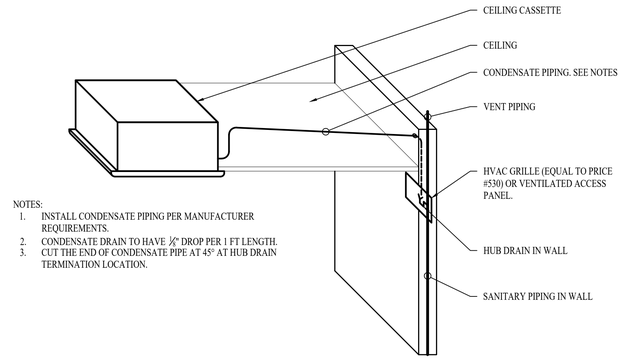

NOTES:
1. INSTALL CONDENSATE PIPING PER MANUFACTURER REQUIREMENTS.
2. CONDENSATE DRAIN TO HAVE ¼" DROP PER 1 FT LENGTH.
3. CUT THE END OF CONDENSATE PIPE AT 45° AT HUB DRAIN TERMINATION LOCATION.

HUB DRAIN (IN WALL) DETAIL

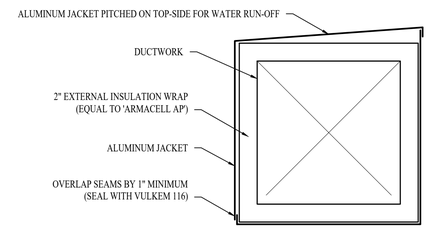

BUILDING EXTERIOR DUCT SECTION DETAIL

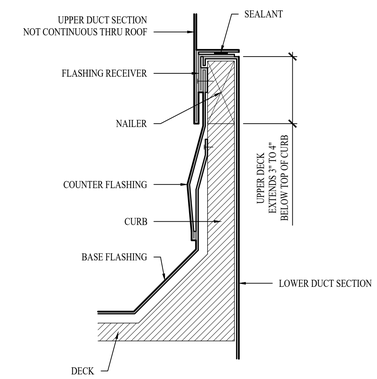

DUCT ROOF PENETRATION DETAIL

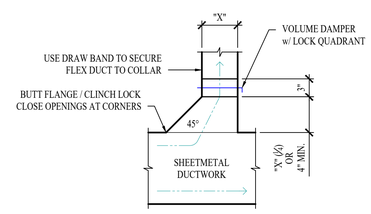

TYPICAL 45° TAKEOFF DETAIL

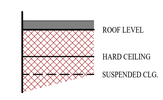

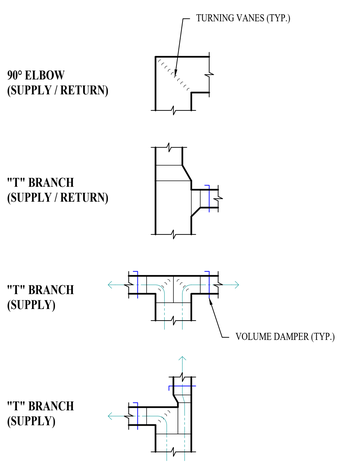

TYPICAL DUCTWORK FITTINGS DETAIL

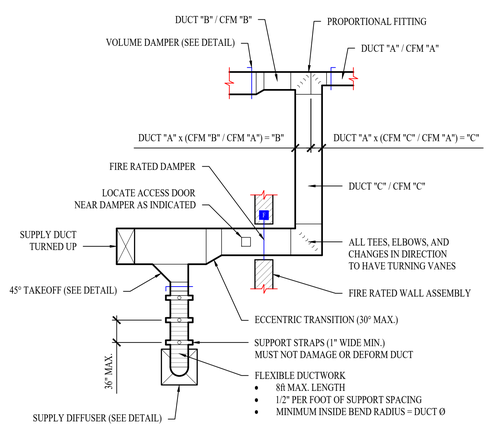

TYPICAL DUCTWORK DETAIL

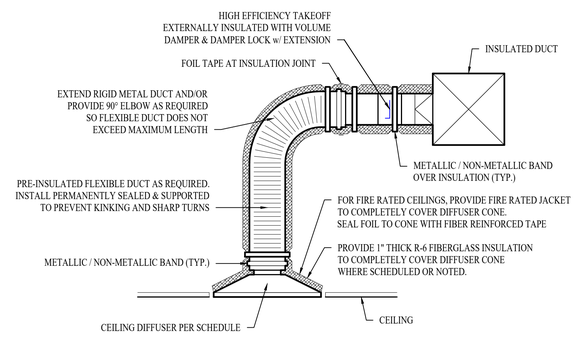

TYPICAL LAY-IN DIFFUSER DETAIL

= INSIDE = INSULATION = OUTSIDE

DUCT INSIDE THERMAL ENVELOPE INSULATION REQUIREMENTS

RECTANGULAR
- SUPPLY = 1" LINER
- RETURN = 1" LINER
- EXHAUST = NONE
- OUTSIDE AIR = 2" WRAP

ROUND
- SUPPLY = 1½" WRAP
- RETURN = NONE
- EXHAUST = NONE
- OUTSIDE AIR = 2" WRAP

SPIRAL
- SUPPLY = NONE
- RETURN = NONE
- EXHAUST = NONE
- OUTSIDE AIR = 2" WRAP

DUCT OUTSIDE THERMAL ENVELOPE INSULATION REQUIREMENTS

RECTANGULAR
- SUPPLY = 1" LINER & 1½" WRAP
- RETURN = 1" LINER & 1½" WRAP
- EXHAUST = 1½" WRAP
- OUTSIDE AIR = NONE

ROUND
- SUPPLY = 2" WRAP
- RETURN = 2" WRAP
- EXHAUST = 1½" WRAP
- OUTSIDE AIR = NONE

SPIRAL
- SUPPLY = 2" WRAP
- RETURN = 2" WRAP
- EXHAUST = 1½" WRAP
- OUTSIDE AIR = NONE

TYPICAL BUILDING INTERIOR DUCT INSULATION DIAGRAM

STATE OF MISSOURI
KEATON E. LEISINGER
NUMBER PE-2021035875
PROFESSIONAL ENGINEER

Keaton E. Leisinger, P.E. Mar. 17th, 2023
PE-2021035875
MO Certificate of Authority # 2018029680

J-SQUARED ENGINEERING
2400 Bluff Creek Drive, Suite 101
Columbia, Missouri 65201
573 - 234 - 4492 phone
www.j-squaredeng.com

J2 PROJECT No:	J20930
J2 DESIGN:	KEL

ISSUE TITLE	DATE
PERMIT SET	3 - 17 - 2023

Mechanical - Electrical - Plumbing Design Drawings for

Hawk Ridge Dental Care

8625 HWY N
Lake Saint Louis, MO 63367

SHEET TITLE

HVAC DETAILS

SHEET NUMBER

M501

RTU SCHEDULE

TAG	EQUIPMENT DESCRIPTION	SIZE (TONS)	ORIENTATION	TOTAL AIRFLOW (CFM)	OA AIRFLOW MAX/MIN (CFM)	GAS HEATING		COOLING (IA: 80 DB/67 WB, OA: 95 DB)			ELECTRICAL			NOTES
						INPUT (k BTU)	OUTPUT (k BTU)	SENSIBLE (KBTU)	TOTAL (KBTU)	MIN. EFFICIENCY	VOLTS / PHASE	MCA	OCP	
RTU-1	ROOF TOP UNIT	6	DOWN FLOW	2100	300 / 90	120	96	53.2	75.0	11.2 EER/12.7 IEER	208/3	35	50	1,2,3,4,5,7,8
RTU-2	ROOF TOP UNIT	6	DOWN FLOW	2400	185	120	96	53.2	75.0	11.2 EER/12.7 IEER	208/3	35	50	1,2,3,4,7
RTU-3	ROOF TOP UNIT	8.5	DOWN FLOW	3400	245 / 80	150	120	84.2	107.2	11.2 EER/12.7 IEER	208/3	44	50	1,2,3,4,7,8
RTU-4	ROOF TOP UNIT	8.5	DOWN FLOW	3000	400 / 180	150	120	84.2	107.2	11.2 EER/12.7 IEER	208/3	44	50	1,2,3,4,6,7,8

NOTES:

1. PROVIDE AND INSTALL 7 DAY PROGRAMABLE HONEYWELL THERMOSTAT. COORDINATE EXACT MOUNTING LOCATION WITH OWNER.
2. WITH FACTORY HAIL GUARD.
3. WITH FACTORY INSTALLED DISCONNECT.
4. ECONOMIZER WITH BAROMETRIC RELIEF SIZED AT 100% OF FLOW. CONTROL TO BE ADJUSTABLE FIXED POINT SET AT 65°F. ECONOMIZER TO BE IECC COMPLIANT WITH FAULT DETECTION AND NOTIFICATION.
5. WITH UNPOWERED WEATHERPROOF GFCI RECEPTACLE.
6. WITH HOT GAS REHEAT/DEHUMIDIFICATION OPTION.
7. WITH SMOKE DETECTOR IN RETURN AIR DUCT TO SHUT DOWN UNIT AND SEND SIGNAL TO BUILDING FIRE ALARM SYSTEM UPON DETECTION OF SMOKE. IF NO BUILDING FIRE ALARM SYSTEM IS PRESENT, PROVIDE ALARM DEVICE IN OCCUPIED AREA.
8. PROVIDE CO2 SENSOR MODULATE BETWEEN MAX AND MIN OA AMOUNTS INDICATED.

FCU & HP SCHEDULE

TAG	EQUIPMENT DESCRIPTION	SIZE (TONS)	ORIENTATION	TOTAL AIRFLOW (CFM)	HEATING (IA:70 DB, OA:0 DB)	COOLING (IA: 80 DB/67 WB, OA: 95 DB)			ELECTRICAL			NOTES
					TOTAL (KBTU)	SENSIBLE (KBTU)	TOTAL (KBTU)	MIN EFF. (SEER)	VOLTS/PH	MCA	OCP	
WU-1	FAN COIL UNIT	2.0	WALL MOUNT	700	18.3	18.5	24	21.4	POWERED THRU HP-1			1,5
HP-1	HEAT PUMP	2.0	-	-					208 / 1	19	30	2,3,4,5
WU-2	FAN COIL UNIT	2.0	WALL MOUNT	700	18.3	18.5	24	21.4	POWERED THRU HP-2			1,5
HP-2	HEAT PUMP	2.0	-	-					208 / 1	19	30	2,3,4,5
CC-1	FAN COIL UNIT	2.0	CEILING CASSETTE	700	26	18.5	24	21.5	POWERED THRU HP-3			1,6
HP-3	HEAT PUMP	2.0	-	-					208 / 1	17	30	2,3,4,6

NOTES:

1. PROVIDE AND INSTALL 7 DAY PROGRAMABLE WIRED REMOTE CONTROLLER. COORDINATE EXACT MOUNTING LOCATION WITH OWNER.
2. WITH FACTORY HAIL GUARD.
3. WITH QUICK-SLING FOR ROOF MOUNTING.
4. WITH WIND BAFFLE.
5. EQUAL TO MITSUBISHI, M# TPKA0A0241KA70A & TRUZA0241HA70NA
6. EQUAL TO MITSUBISHI, M# TPLA0A0241EA70B & TRUZH0241HA10NA

EXHAUST FAN SCHEDULE

TAG	EQUIPMENT TYPE	MANUFACTURER (OR EQUAL)	MODEL (OR EQUAL)	FLOW		ELECTRICAL			PHYSICAL		NOTES
				CFM	S.P.	VOLT/PH	MCA	OCP	DIM.	WEIGHT	
EF-1	IN-LINE EXHAUST FAN	S & P	TD-SILENT 150S	210	3/8"	120 / 1	0.54	15	19x11x9	14	1,2
EF-2	IN-LINE EXHAUST FAN	S & P	TD-SILENT 150S	210	3/8"	120 / 1	0.54	15	19x11x9	14	1,2
EF-3	EXHAUST FAN	BROAN	671	50	3/8"	120 / 1	1.2	15	-	-	1

NOTES:

1. WITH BACKDRAFT DAMPER
2. WITH SPEED CONTROLLER

AIR DEVICE SCHEDULE

TAG	SERVICE	MANUFACTURER (OR EQUAL)	MODEL (OR EQUAL)	SIZE	COLOR / FINISH	NOTES
E1	EXHAUST	PRICE	80	AS INDICATED	WHITE	1,2,3
L1	OA/EX	POTTORFF	EFD	AS INDICATED	PRIMED	1,4
R1	RETURN	PRICE	80	AS INDICATED	WHITE	1
R2	RETURN	PRICE	80	AS INDICATED	WHITE	1,3
R3	RETURN	PRICE	530	AS INDICATED	WHITE	1
S1	SUPPLY	PRICE	SPD	24x24	WHITE	1,2
S2	SUPPLY	PRICE	520D	8x4	WHITE	1,2,5
S3	SUPPLY	PRICE	520D	12x6	WHITE	1,2,5
S4	SUPPLY	PRICE	520D	18x6	WHITE	1,2,5
S5	SUPPLY	PRICE	520D	22x6	WHITE	1,2,5
S6	SUPPLY	PRICE	SPD	12x12	WHITE	1,2,3

NOTES:

1. VERIFY AIR DEVICE FINISHES WITH OWNER/ARCHITECT PRIOR TO INSTALLATION
2. SEE PLANS FOR AIRFLOW
3. WITH DRYWALL INSTALLATION KIT
4. PAINT TO MATCH EXTERIOR OF THE BUILDING.
5. WITH DOUBLE DEFLECTION DAMPERS

STATE OF MISSOURI
KEATON E. LEISINGER
NUMBER PE-2021035875
PROFESSIONAL ENGINEER

Keaton E. Leisinger, P.E. Mar. 17th, 2023
PE-2021035875
MO Certificate of Authority # 2018029680

J-SQUARED ENGINEERING
2400 Bluff Creek Drive, Suite 101
Columbia, Missouri 65201
573 - 234 - 4492 phone
www.j-squaredeng.com

J2 PROJECT No:	J20930
J2 DESIGN:	KEL

ISSUE TITLE	DATE
PERMIT SET	3 - 17 - 2023

Mechanical - Electrical - Plumbing Design Drawings for

Hawk Ridge Dental Care

8625 HWY N
Lake Saint Louis, MO 63367

SHEET TITLE

HVAC SCHEDULES

SHEET NUMBER

M601

POWER PLAN SYMBOL LEGEND

- CIRCUIT WIRING
- PX-XX — CIRCUIT TAG
- J — JUNCTION BOX
- XX +42 — RECEPTACLE
  - INDICATES MOUNTING HEIGHT TO BOTTOM OF BOX (STANDARD @ 18" AFF UNLESS NOTED OTHERWISE)
  - "WP" = WEATHERPROOF OUTDOOR RECEPTACLE
  - "AW" = ABOVE WINDOW RECEPTACLE
  - "AC" = ABOVE CEILING RECEPTACLE
  - "EX" = EXISTING RECEPTACLE TO REMAIN
- GFCI DUPLEX CONVENIENCE RECEPTACLE
- 208V RECEPTACLE
- QUADPLEX CONVENIENCE RECEPTACLE
- U — USB OUTLET WITH USB-A & USB-C CHARGING PORT
- DATA / PHONE JACK BOX WITH 1" CONDUIT & PULL STRING UP TO CEILING SPACE (STANDARD @ 18" AFF UNLESS NOTED OTHERWISE)
- AP — WIRELESS ACCESS POINT, CEILING MOUNTED
- FLOOR RECEPTACLE
- FLOOR DATA
- D — DISCONNECT

POWER PLAN GENERAL NOTES:

1. SEE SHEETS E501 & E601 FOR ADDITIONAL ELECTRICAL NOTES, DETAILS, & SCHEDULES.

POWER PLAN KEY NOTES:

1. POWER FOR OWNER PROVIDED SIGN. COORDINATE WITH OWNER/SIGN PROVIDER FOR FINAL ELECTRICAL CONNECTION DETAILS & POWER REQUIREMENTS PRIOR TO ROUGH-IN.
2. (2) 2" CONDUITS UNDERFLOOR FROM HEAD CABINET TO FLOOR BOX. FLOOR BOX EQUAL TO LEGEND #EFB85 WITH COVER.
3. X-RAY LOCATION. COORDINATE WITH DENTAL EQUIPMENT SUPPLIER FOR LOCATION PRIOR TO ROUGH-IN.
4. J-BOX FOR PLUGMOLD STRIP. EQUAL TO LEGRAND #AL20GB612 PLUGMOLD.
5. INSTRUMENT WASHER POWER. COORDINATE WITH PLUMBER PRIOR TO ROUGH-IN. ELECTRICAL CONNECTION TO BE MAD BY ELECTRICIAN.
6. POWER AND DATA RECEPTACLE TO BE MOUNTED IN SUSPENDED "CLOUD". SEE DENTAL SUPPLIER PLANS FOR DETAILS.
7. OWNER PROVIDED EQUIPMENT. COORDINATE EXACT POWER REQUIREMENTS WITH OWNER PRIOR TO ROUGH-IN.
8. DENTAL EQUIPMENT SUPPLIER PROVIDED X-RAY MACHINE. COORDINATE EXACT POWER REQUIREMENTS WITH DENTAL EQUIPMENT SUPPLIER PRIOR TO ROUGH-IN.
9. RECIRCULATION PUMP POWER. VERIFY EXACT MOUNTING HEIGHT PRIOR TO ROUGH-IN.
10. X-RAY SWITCH (60" A.F.F.). COORDINATE WIRING AND CONDUIT WITH DENTAL EQUIPMENT SUPPLIER.

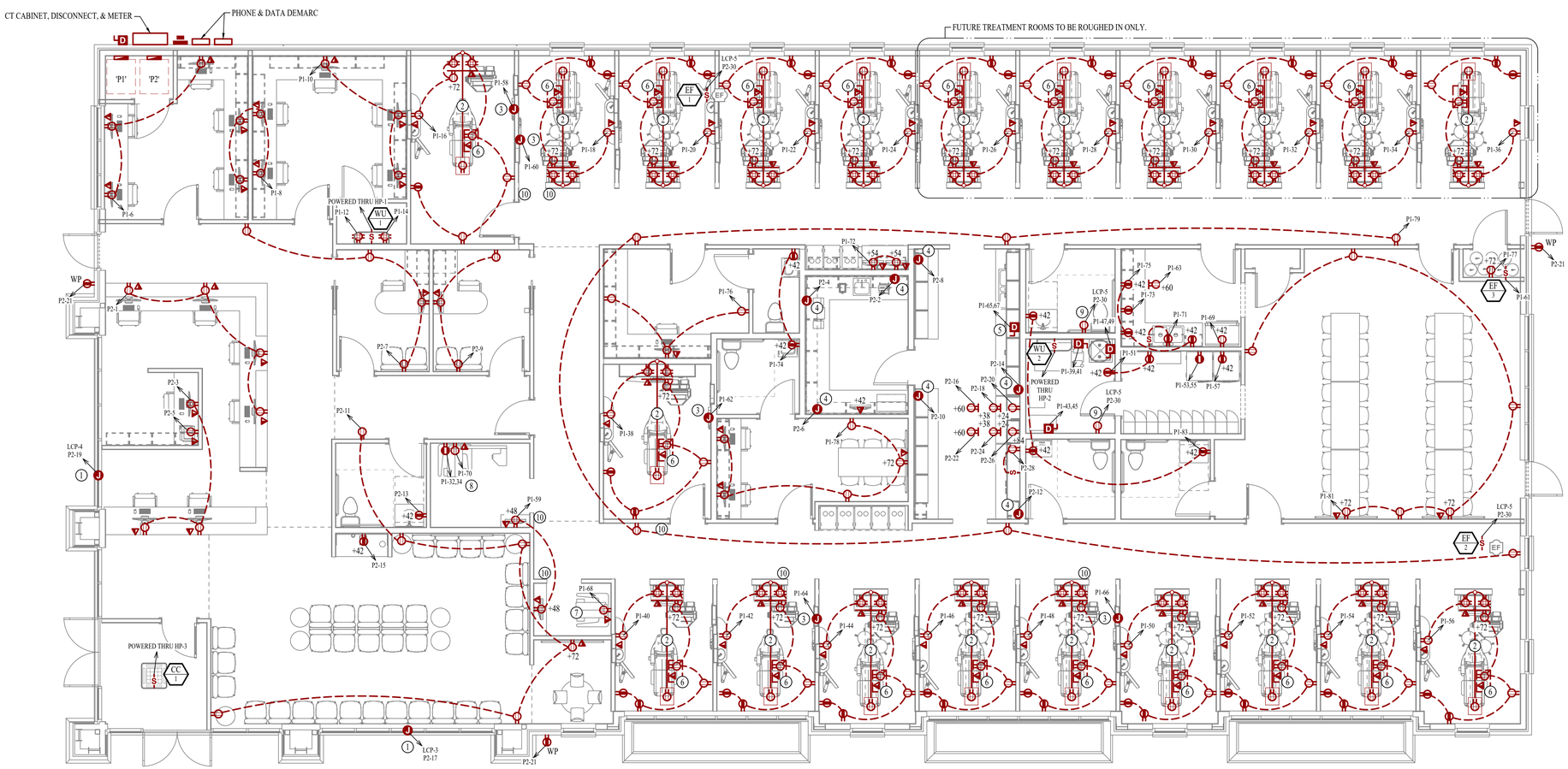

POWER PLAN

SCALE: 3/16" = 1'-0"

STATE OF MISSOURI
KEATON E. LEISINGER
NUMBER PE-2021035875
PROFESSIONAL ENGINEER

Keaton E. Leisinger, P.E. Mar. 17th, 2023
PE-2021035875
MO Certificate of Authority # 2018029680

J-SQUARED ENGINEERING
2400 Bluff Creek Drive, Suite 101
Columbia, Missouri 65201
573 - 234 - 4492 phone
www.j-squaredeng.com

J2 PROJECT No:	J20930
J2 DESIGN:	KEL

ISSUE TITLE	DATE
PERMIT SET	3 - 17 - 2023

Mechanical - Electrical - Plumbing Design Drawings for

Hawk Ridge Dental Care

8625 HWY N
Lake Saint Louis, MO 63367

SHEET TITLE

POWER PLAN

SHEET NUMBER

EP101

LIGHTING PLAN SYMBOL LEGEND

- X1 — "X1" INDICATES FIXTURE TYPE (REFER TO SCHEDULE)
- LIGHTING FIXTURE
- EM — "EM" INDICATES EMERGENCY BATTERY BACKUP
- NL — "NL" INDICATES UN-SWITCHED NIGHT LIGHT
- EXIT LIGHT
- INDICATES REQUIRED REMOTE HEAD
- EMERGENCY EGRESS LIGHT
- SWITCH (WALL MOUNTED)
- SWITCH TYPE:
  - 3 = 3-WAY
  - 4 = 4-WAY
  - M = MOMENTARY SWITCH
  - SS = SCENE SWITCH
- DIMMER SWITCH (WALL MOUNTED)
- SWITCH TYPE:
  - SEE "SWITCH (WALL MOUNTED)" FOR TYPE DESIGNATIONS
- SWITCH (CEILING MOUNTED)
- SWITCH TYPE:
  - SEE "SWITCH (WALL MOUNTED)" FOR TYPE DESIGNATIONS
- PP — POWER PACK
- DAYLIGHT CONTROL AREA

LIGHTING PLAN GENERAL NOTES:

1. SEE SHEETS E501 & E601 FOR ADDITIONAL ELECTRICAL NOTES, DETAILS, & SCHEDULES.
2. OCCUPANCY / VACANCY SENSOR QUANTITIES AND GENERAL LOCATIONS SHOWN FOR REFERENCE ONLY. CONTRACTOR TO PROVIDE AND INSTALL SENSOR WITH SPACING PER MANUFACTURER SPECIFICATIONS AND INCLUDE ADDITIONAL SENSORS IF NECESSARY. CEILING-MOUNTED SENSORS SHALL BE INSTALLED WITHIN MANUFACTURE'S ACCEPTABLE MOUNTING HEIGHT RANGE.

LIGHTING PLAN KEY NOTES:

1. LIGHT FIXTURES TO BE MOUNTED IN "CLOUD". SEE DESIGN ERGONOMICS DETAILS.
2. MOUNT ABOVE DOOR ON WALL.

LIGHTING CONTROL GENERAL NOTES:

1. LIGHTING CONTROL SYMBOL LOCATION SHALL INDICATE LIGHTING CONTROL DEVICE LOCATION.

LIGHTING CONTROL SYMBOL LEGEND

- A — SEE STAFF LOUNGE IN LIGHTING CONTROL SCHEDULE.
- B — SEE CLOSET IN LIGHTING CONTROL SCHEDULE.
- C — SEE CORRIDOR IN LIGHTING CONTROL SCHEDULE.
- D — SEE WAITING ROOM IN LIGHTING CONTROL SCHEDULE.
- E — SEE RESTROOM IN LIGHTING CONTROL SCHEDULE.
- F — SEE OFFICE IN LIGHTING CONTROL SCHEDULE.

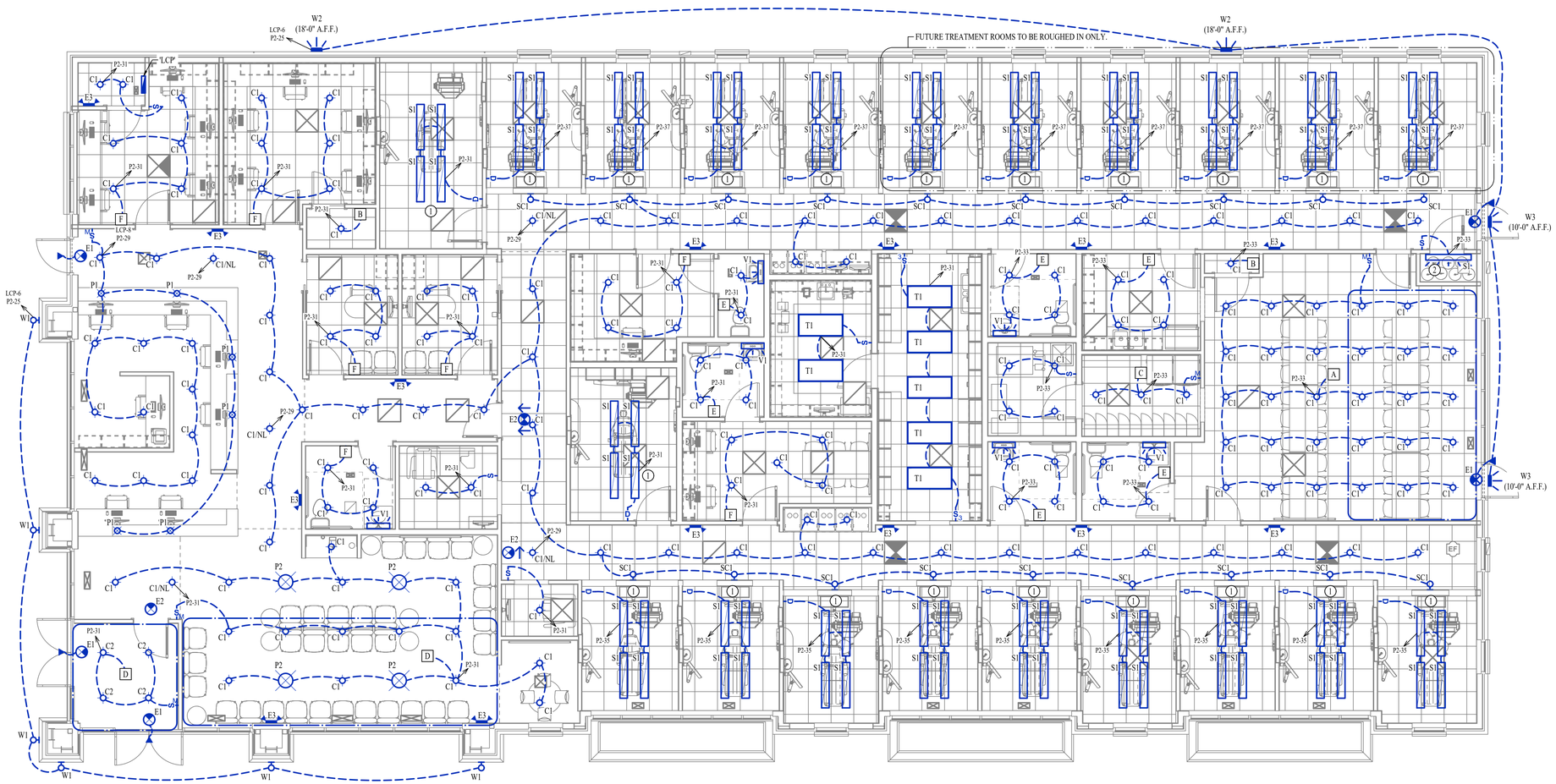

LIGHTING PLAN

SCALE: 3/16" = 1'-0"

STATE OF MISSOURI
KEATON E. LEISINGER
NUMBER PE-2021035875
PROFESSIONAL ENGINEER

Keaton E. Leisinger, P.E. Mar. 17th, 2023
PE-2021035875
MO Certificate of Authority # 2018029680

J-SQUARED ENGINEERING
2400 Bluff Creek Drive, Suite 101
Columbia, Missouri 65201
573 - 234 - 4492 phone
www.j-squaredeng.com

J2 PROJECT No:	J20930
J2 DESIGN:	KEL

ISSUE TITLE	DATE
PERMIT SET	3 - 17 - 2023

Mechanical - Electrical - Plumbing Design Drawings for

Hawk Ridge Dental Care

8625 HWY N
Lake Saint Louis, MO 63367

SHEET TITLE

LIGHTING PLAN

SHEET NUMBER

EL101

LIGHTING PLAN SYMBOL LEGEND

- X1 / EM / NL — "X1" INDICATES FIXTURE TYPE (REFER TO SCHEDULE); LIGHTING FIXTURE; "EM" INDICATES EMERGENCY BATTERY BACKUP; "NL" INDICATES UN-SWITCHED NIGHT LIGHT
- EXIT LIGHT — INDICATES REQUIRED REMOTE HEAD
- EMERGENCY EGRESS LIGHT
- S X — SWITCH (WALL MOUNTED)
  SWITCH TYPE:
  - 3 = 3-WAY
  - 4 = 4-WAY
  - M = MOMENTARY SWITCH
  - SS = SCENE SWITCH
- D X — DIMMER SWITCH (WALL MOUNTED)
  SWITCH TYPE:
  - SEE "SWITCH (WALL MOUNTED)" FOR TYPE DESIGNATIONS
- S X — SWITCH (CEILING MOUNTED)
  SWITCH TYPE:
  - SEE "SWITCH (WALL MOUNTED)" FOR TYPE DESIGNATIONS
- PP — POWER PACK
- DAYLIGHT CONTROL AREA

LIGHTING PLAN GENERAL NOTES:

1. SEE SHEET E501 & E601 FOR ADDITIONAL ELECTRICAL NOTES, DETAILS, & SCHEDULES.
2. OCCUPANCY / VACANCY SENSOR QUANTITIES AND GENERAL LOCATIONS SHOWN FOR REFERENCE ONLY. CONTRACTOR TO PROVIDE AND INSTALL SENSOR WITH SPACING PER MANUFACTURER SPECIFICATIONS AND INCLUDE ADDITIONAL SENSORS IF NECESSARY. CEILING-MOUNTED SENSORS SHALL BE INSTALLED WITHIN MANUFACTURE'S ACCEPTABLE MOUNTING HEIGHT RANGE.

LIGHTING PLAN KEY NOTES:

1. EXTERIOR TAPE LIGHT TO BE MOUNTED ON THE UNDERSIDE OF THE FASCIA. SEE ARCHITECTURAL DETAILS.

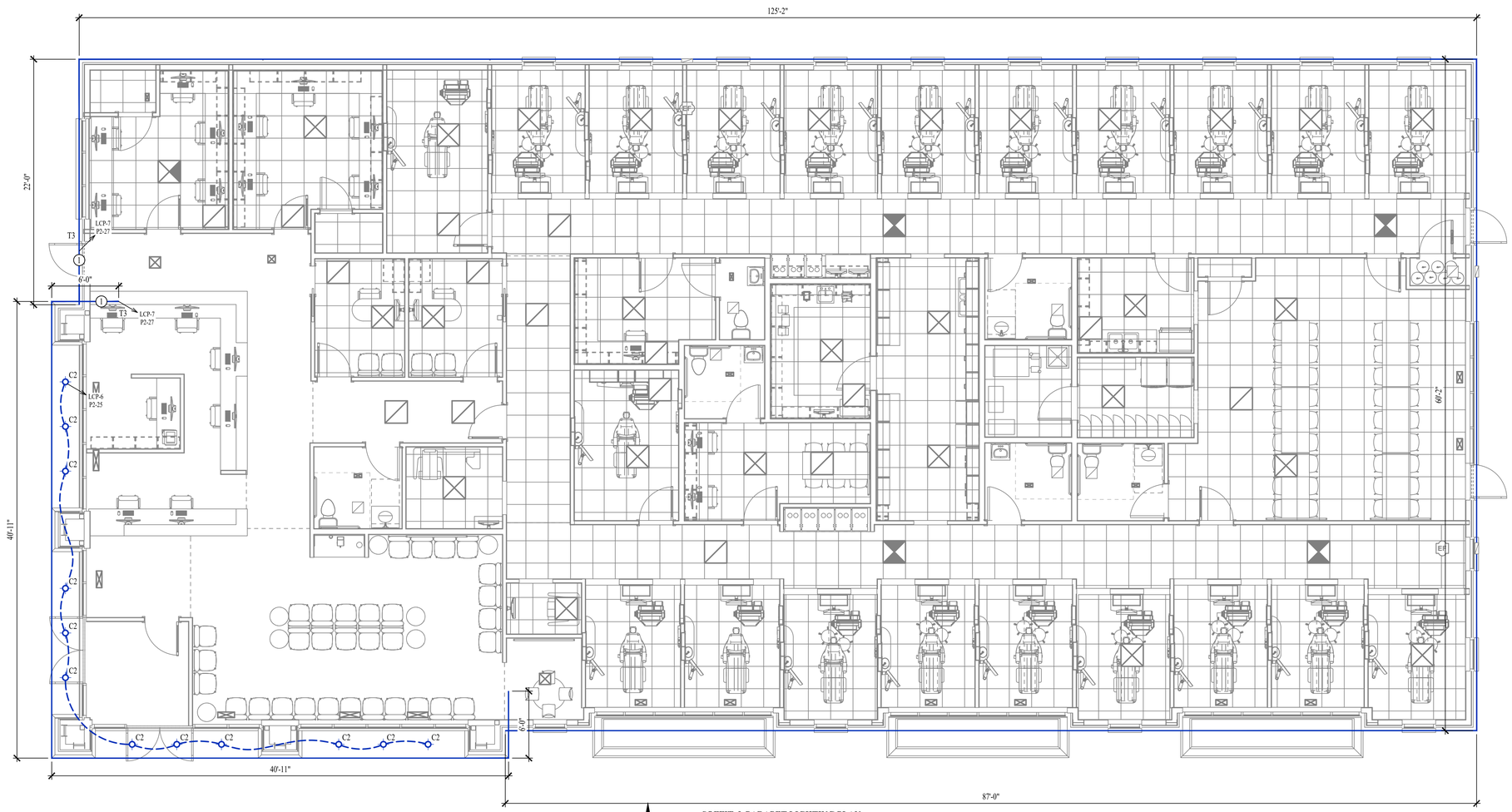

SOFFIT & PARAPET LIGHTING PLAN

SCALE: 3/16" = 1'-0"

STATE OF MISSOURI
KEATON E. LEISINGER
NUMBER PE-2021035875
PROFESSIONAL ENGINEER

Keaton E. Leisinger, P.E. Mar. 17th, 2023
PE-2021035875
MO Certificate of Authority # 2018029680

J-SQUARED ENGINEERING
2400 Bluff Creek Drive, Suite 101
Columbia, Missouri 65201
573 - 234 - 4492 phone
www.j-squaredeng.com

J2 PROJECT No:	J20930
J2 DESIGN:	KEL

ISSUE TITLE	DATE
PERMIT SET	3 - 17 - 2023

Mechanical - Electrical - Plumbing Design Drawings for

Hawk Ridge Dental Care

8625 HWY N
Lake Saint Louis, MO 63367

SHEET TITLE

SOFFIT & PARAPET LIGHTING PLAN

SHEET NUMBER

EL102

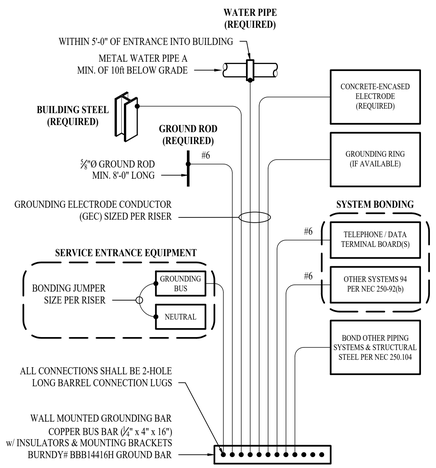

TYPICAL GROUNDING & BONDING DETAIL

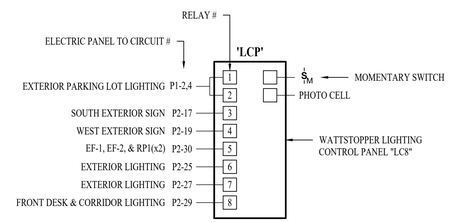

LIGHTING CONTROL PANEL SCHEDULE

RELAY #	OVERRIDE SWITCH	OPERATIONAL SCHEDULE
1 & 2	NO	ON AT DUSK, OFF AT DAWN
3	NO	ON ONE HOUR BEFORE OCCUPIED HOURS, OFF ONE HOUR AFTER OCCUPIED HOURS.
4	NO	ON ONE HOUR BEFORE OCCUPIED HOURS, OFF ONE HOUR AFTER OCCUPIED HOURS.
5	NO	ON DURING OCCUPIED HOURS
6	NO	ON ONE HOUR BEFORE OCCUPIED HOURS, OFF ONE HOUR AFTER OCCUPIED HOURS.
7	NO	ON ONE HOUR BEFORE OCCUPIED HOURS, OFF ONE HOUR AFTER OCCUPIED HOURS.
8	YES	ON DURING OCCUPIED HOURS

LIGHTING CONTROL PANEL

ELECTRICAL SPECIFICATIONS

1. GENERAL
   - 1.1. THE ENTIRE ELECTRICAL SYSTEM SHALL BE CONTINUOUSLY GROUNDED. EVERY BRANCH CONDUIT SHALL INCLUDE A GREEN GROUND CONDUCTOR SIZED PER NEC.
   - 1.2. ARC-FAULT CIRCUITS SHALL BE RUN WITH A DEDICATED NEUTRAL AS REQUIRED BY MANUFACTURER.
   - 1.3. PROVIDE PERMANENT ARC-FLASH LABEL AFFIXED TO EVERY DISCONNECT AND PANEL.
   - 1.4. PROVIDE TYPE WRITTEN PANEL SCHEDULE FOR EACH PANEL.
2. MATERIALS
   - 2.1. CONDUIT & CONDUCTORS
     - 2.1.1. ALL CONDUCTORS SIZES INDICATED ON PLANS ARE COPPER UNLESS NOTED OTHERWISE.
     - 2.1.2. ABOVE GRADE CONDUCTORS SHALL BE THHN COPPER. BELOW GRADE CONDUCTORS SHALL BE XHHW-2.
     - 2.1.3. MINIMUM CONDUCTOR SIZE SHALL BE #12 UNLESS NOTED OTHERWISE. 120V, 20 AMP CIRCUITS WITH CONDUCTOR LENGTH GREATER THAN 100' SHALL BE MINIMUM #10. ELECTRICAL CONTRACTOR IS RESPONSIBLE FOR MEASURING ACTUAL CONDUCTOR LENGTH AND INCREASING CONDUCTOR SIZE TO COMPENSATE FOR VOLTAGE DROP AS REQUIRED BY NEC.
     - 2.1.4. RIGID GALVANIZED OR SCHEDULE 40 PVC CONDUIT SHALL BE USED FOR SERVICE WIRING, BELOW GRADE INSTALLATIONS, OR WHERE EXPOSED TO WEATHER.
     - 2.1.5. IN APPLICATIONS OTHER THAN THOSE LISTED IN 2.1.4, EMT OR MC CABLE IS ACCEPTABLE. WHERE CONDUCTORS ARE PROTECTED FROM DAMAGE, ENCLOSED IN BUILDING MATERIALS, AND CONSTRUCTION IS OF A PERMITTED TYPE, NM CABLE MAY BE USED.
   - 2.2. DEVICES
     - 2.2.1. CONTRACTOR TO PROVIDE J-BOXES, COVER PLATES, AND ANY ACCESSORIES REQUIRED TO PROVIDE A COMPLETE SYSTEM. SEE ARCHITECTURAL PLANS FOR DEVICE COLORS.
     - 2.2.1. DUPLEX RECEPTACLES SHALL BE TAMPER RESISTANT, 20 AMP, EQUAL TO LEVITON CR20.
     - 2.2.2. TOGGLE WALL SWITCHES SHALL BE EQUAL TO LEVITON CS120-2
     - 2.2.3. DIMMER SWITCHES SHALL BE TESTED WITH FIXTURES AND LAMPS FOR COMPATIBILITY.
3. EMERGENCY LIGHTING
   - 3.1. THE BRANCH CIRCUIT FEEDING THE EMERGENCY FIXTURE SHALL BE THE SAME BRANCH CIRCUIT AS THAT SERVING THE NORMAL LIGHTING IN THE AREA AND CONNECTED AHEAD OF ANY LOCAL SWITCHES.

POWER RISER GENERAL NOTES:

1. COORDINATE FINAL ELECTRICAL SERVICE LOCATION WITH CUIVER RIVER ELECTRIC COOP.
2. CURRENT AIC RATINGS SHOWN USE THE ASSUMED INFORMATION PROVIDED BELOW:
   - 2.1. 200 kVA, 120/208V, 3Ø, Z = 4.0%, PF = 100%
   - 2.2. METER LOCATION INSTALLED APPROXIMATELY WHERE SHOWN IN PLANS.

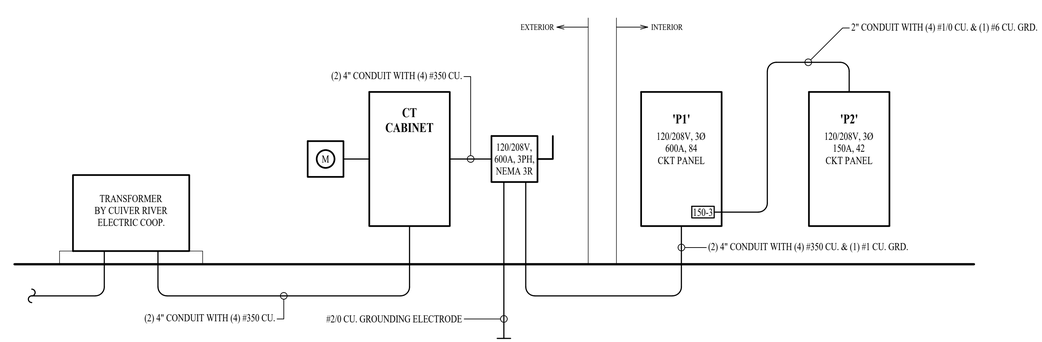

POWER RISER

Keaton E. Leisinger, P.E. Mar. 17th, 2023
PE-2021035875
MO Certificate of Authority # 2018029680

J-SQUARED ENGINEERING
2400 Bluff Creek Drive, Suite 101
Columbia, Missouri 65201
573 - 234 - 4492 phone
www.j-squaredeng.com

J2 PROJECT No:	J20930
J2 DESIGN:	KEL

ISSUE TITLE	DATE
PERMIT SET	3 - 17 - 2023

Mechanical - Electrical - Plumbing Design Drawings for

Hawk Ridge Dental Care

8625 HWY N
Lake Saint Louis, MO 63367

SHEET TITLE

ELECTRICAL DETAILS

SHEET NUMBER

E501

PANEL 'P1' SCHEDULE

VOLTAGE	PANEL SIZE	MOUNTING	AIC RATING		
120/208	600A MLO	RECESSED	22,000	PHASE "A" LOAD	528.8
				PHASE "B" LOAD	486.4
NEMA RATING: 1				PHASE "C" LOAD	519.3

CIRCUIT NUMBER	DESCRIPTION	BREAKER SIZE	AMPS	PHASE	AMPS	BREAKER SIZE	DESCRIPTION	CIRCUIT NUMBER
1	RTU-1	50-3	35	A	4	20-2	PARKING LOT / LIGHTING	2
3	-	-	35	B	4	-	-	4
5	-	-	35	C	4.5	20-1	CALL CENTER / RECEPTS	6
7	RTU-2	50-3	35	A	6	20-1	BUSINESS OFFICE / RECEPTS	8
9	-	-	35	B	4.5	20-1	BUSINESS OFFICE / RECEPTS	10
11	-	-	35	C	3	20-1	IT CLOSET / QUAD	12
13	RTU-4	50-3	44	A	3	20-1	IT CLOSET / QUAD	14
15	-	-	44	B	15	20-1	QUIET TREATMENT / RECEPTS	16
17	-	-	44	C	15	20-1	TREATMENT ROOM #2 / RECEPTS	18
19	RTU-3	50-3	44	A	15	20-1	TREATMENT ROOM #3 / RECEPTS	20
21	-	-	44	B	15	20-1	TREATMENT ROOM #4 / RECEPTS	22
23	-	-	44	C	15	20-1	TREATMENT ROOM #5 / RECEPTS	24
25	HP-1 & WU-1	30-2	19	A	15	20-1	TREATMENT ROOM #6 / RECEPTS	26
27	-	-	19	B	15	20-1	TREATMENT ROOM #7 / RECEPTS	28
29	HP-2 & WU-2	30-2	19	C	15	20-1	TREATMENT ROOM #8 / RECEPTS	30
31	-	-	19	A	15	20-1	TREATMENT ROOM #9 / RECEPTS	32
33	HP-3 & CC-1	30-2	17	B	15	20-1	TREATMENT ROOM #10 / RECEPTS	34
35	-	-	17	C	15	20-1	TREATMENT ROOM #11 / RECEPTS	36
37	ROOF / WP RECEPTS.	20-1	4.5	A	15	20-1	TREATMENT ROOM #12 / RECEPTS	38
39	DENTAL AIR SYSTEM	40-2	24	B	15	20-1	TREATMENT ROOM #13 / RECEPTS	40
41	-		24	C	15	20-1	TREATMENT ROOM #14 / RECEPTS	42
43	DENTAL VAC SYSTEM	20-2	16	A	15	20-1	TREATMENT ROOM #15 / RECEPTS	44
45	-	-	16	B	15	20-1	TREATMENT ROOM #16 / RECEPTS	46
47	WATER HEATER	30-2	20	C	15	20-1	TREATMENT ROOM #17 / RECEPTS	48
49	-	-	20	A	15	20-1	TREATMENT ROOM #18 / RECEPTS	50
51	MECH. / GFCI	20-1	3	B	15	20-1	TREATMENT ROOM #19 / RECEPTS	52
53	CLOTHES DRYER	30-2	20	C	15	20-1	TREATMENT ROOM #20 / RECEPTS	54
55	-	-	20	A	15	20-1	TREATMENT ROOM #21 / RECEPTS	56
57	CLOTHES WASHER	20-1	10	B	12	20-1	QUIET TREATMENT / X-RAY	58
59	X-RAY COMPUTER / RECEPTS	20-1	3	C	12	20-1	TREATMENT ROOM #2 / X-RAY	60
61	MED GAS CLOSET / EF-3	20-1	1.2	A	12	20-1	TREATMENT ROOM #12 / X-RAY	62
63	KITCHEN / MICROWAVE	20-1	5	B	12	20-1	TREATMENT ROOM #14 / X-RAY	64
65	STERILIZATION / INSTURMENT WASHER	35-2	27	C	12	20-1	TREATMENT ROOM #17 / X-RAY	66
67	-	-	27	A	10	20-1	IMAGING #2 / PANO	68
69	KITCHEN / REF	20-1	5	B	10	20-1	IMAGING ROOM / PANO	70
71	KITCHEN / DISP	20-1	5	C	3	20-1	HALLWAY / WORK STATION	72
73	KITCHEN / DISHWASHER	20-1	5	A	3	20-1	RESTROOM / GFCITS	74
75	KITCHEN / COUNTER RECEPTS	20-1	4.5	B	4.5	20-1	DOCTOR OFFICE / RECEPTS	76
77	DENTAL GAS MANIFOLD	20-1	1.5	C	7.5	20-1	PRIVATE OFFICE / RECEPTS	78
79	HALLWAY / RECEPTS	20-1	9	A	87.1	150-3	PANEL "P2"	80
81	STAFF LOUNGE / RECEPTS	20-1	9	B	63.9	-	-	82
83	CENTER RESTROOM / GFCTS	20-1	4.5	C	73.3	-	-	84

NOTES:

A: PANEL SHALL BE EQUAL TO SQUARE D MODEL "NQ"

B: ELECTRICIAN SHALL VERIFY BREAKER WITH EQUIPMENT PRIOR TO PURCHASE & INSTALL.

C: AFTER COMPLETION OF WORK, ELECTRICAN SHALL PROVIDE A TYPE WRITTEN PANEL DIRECTORY IN NEW PANEL.

LIGHTING CONTROL SCHEDULE

SYMBOL	SPACE TYPE	OCCUPANCY SENSOR				WALL SWITCH		DAYLIGHT SENSOR			NOTES
	ROOM TYPES	VACANCY MODE	OCCUPANCY MODE	SENSOR TIMEOUT PERIOD (MIN.)	DUAL TECHNOLOGY	MANUAL (OFF/ON)	MANUAL DIMMING	SWITCHING (OFF/ON)	DIMMING	TARGET LIGHT LIEVEL (FC)	
A	STAFF LOUNGE	X		10 MIN.	X	X	X		X	30	2
B	CLOSET	X		10 MIN.		X					
C	CORRIDOR		X	10 MIN.	X	X					2
D	WAITING ROOM		X	10 MIN.	X	X			X	30	1,2
E	RESTROOM	X		10 MIN.		X					
F	OFFICE	X		10 MIN.	X	X					

NOTES:

1. LIGHTS SHALL AUTOMATICALLY TURN ON AT 50% AND TURN OFF WHEN THE SPACE IS VACANT.
2. CEILING MOUNTED CONTROL DEVICE. CONTRACTOR TO PROVIDE AND INSTALL SENSOR WITH SPACING PER MANUFACTURER SPECIFICATIONS AND INCLUDE ADDITIONAL SENSORS IF NECESSARY.

PANEL 'P2' SCHEDULE

VOLTAGE	PANEL SIZE	MOUNTING	AIC RATING		
120/208	150A MLO	RECESSED	22,000	PHASE "A" LOAD	87.1
				PHASE "B" LOAD	63.9
NEMA RATING: 1				PHASE "C" LOAD	73.3

CIRCUIT NUMBER	DESCRIPTION	BREAKER SIZE	AMPS	PHASE	AMPS	BREAKER SIZE	DESCRIPTION	CIRCUIT NUMBER
1	RECEPTION / RECEPTS	20-1	6	A	6	20-1	LAB / COUNTER PLUG MOLD***	2
3	RECEPTION / RECEPTS	20-1	4.5	B	6	20-1	LAB / COUNTER PLUG MOLD***	4
5	RECEPTION / PRINTER	20-1	5	C	6	20-1	LAB / COUNTER PLUG MOLD	6
7	CONSULT ROOM / RECEPTS	20-1	6	A	6	20-1	STERILIZATION / COUNTER PLUG MOLD	8
9	CONSULT ROOM / RECEPTS	20-1	4.5	B	6	20-1	STERILIZATION / COUNTER PLUG MOLD	10
11	LOBBY / RECEPTS	20-1	9	C	6	20-1	STERILIZATION / COUNTER PLUG MOLD	12
13	RESTROOM / GFCI	20-1	1.5	A	6	20-1	STERILIZATION / COUNTER PLUG MOLD***	14
15	COFFEE BAR / GFCI	20-1	1.5	B	8	20-1	STERILIZATION / AUTOCLAVE	16
17	SOUTH EXTERIOR SIGN / POWER	20-1	5	C	8	20-1	STERILIZATION / AUTOCLAVE	18
19	WEST EXTERIOR SIGN / POWER	20-1	5	A	8	20-1	STERILIZATION / AUTOCLAVE	20
21	EXTERIOR WP / RECEPTS	20-1	4.5	B	8	20-1	STERILIZATION / AUTOCLAVE	22
23	SPARE	20-1		C	8	20-1	STERILIZATION / AUTOCLAVE	24
25	EXTERIOR LIGHTING	20-1	7.1	A	8	20-1	STERILIZATION / AUTOCLAVE	26
27	EXTERIOR BORDER / LIGHTING	20-1	12	B	1.5	20-1	STERILIZATION / RANGE HOOD	28
29	CORRIDOR & FRONT DESK / LIGHTING	20-1	10.2	C	3.5	20-1	EXHAUST FAN (EF-1 & EF-2) & RECIRC PUMP	30
31	WEST SIDE / LIGHTING	20-1	13.5	A		20-2	FUTURE X-RAY	32
33	EAST SIDE / LIGHTING	20-1	7.4	B		-	-	34
35	SOUTH TREATMENT / LIGHTING	20-1	12.6	C		20-1	SPARE	36
37	NORTH TREATMENT / LIGHTING	20-1	14	A		20-1	SPARE	38
39	SPARE	20-1		B		20-1	SPARE	40
41	SPARE	20-1		C		20-1	SPARE	42

NOTES:

A: PANEL SHALL BE EQUAL TO SQUARE D MODEL "QO"

B: ELECTRICIAN SHALL VERIFY BREAKER WITH EQUIPMENT PRIOR TO PURCHASE & INSTALL.

C: AFTER COMPLETION OF WORK, ELECTRICAN SHALL PROVIDE A TYPE WRITTEN PANEL DIRECTORY IN NEW PANEL.

D: *** INDICATES GFCI PROTECTED BREAKER.

LIGHT FIXTURE SCHEDULE

TAG	MANUFACTURER (OR EQUAL)	MODEL NUMBER (OR EQUAL)	DESCRIPTION	MOUNTING	LUMEN OUTPUT	CCT (°K)	CRI	VOLTS	WATTS	NOTES
C1	HALO	HC615D010-HM60525835-61MDC	6" ROUND LED CAN	SURFACE	1500	3500	80	120	15	1
C2	HALO	PR4FES24D010-PR4M24MD8FSMW	4" ROUND LED CAN	SURFACE	2000	3000	80	120	21	1,2
E1	SURE LITES	APCH7R WITH APWR2	INTERIOR EXIT LIGHT WITH EXTERIOR REMOTE HEAD	CEILING				UNV	1	1,3
E2	SURE LITES	APCH7R	INTERIOR EXIT LIGHT WITH HEADS	WALL / CEILING				UNV	1	1,3
E3	SURE LITES	APEL	EMERGENCY EGRESS LIGHT	WALL				UNV	1	1,4
P1	OPTIMA	OP41-35-W-SG-CB	DECORATIVE PENDANT	PENDANT	840	3500	80	120	10	1
P2	VISUAL COMFORT & CO	3124309EN-05	DECORATIVE PENDANT	PENDANT	3100	3500	80	120	35	1,8
S1	METALUX	4BCLED-LD4-40SL-F-UNV-L835-CD1-U	4' LINEAR	WALL BRACKET	4000	3500	80	120	42	1
SC1	AFX	DPHS0408L30D1PC	LED SCONCE	WALL	800	3000	80	120	9	1
T1	METALUX	24FP4735C	2x4 LED FLAT PANEL	ACT GRID	4990	3500	80	120	40	1
T3	GLLS	SF-11D-1-01-2W-E-30K-24DC	EXTERIOR TAPE LIGHT	SURFACE	143 / FT	3000	80	120	3.7 / FT	1,7
V1	AFX	DPHV2007L30D1PC	LED VANITY	ABOVE WALL MIRROR	900	3000	80	120	23	1
W1	BROWNLEE	7115-15-BZ-H08-30K	WALL SCONCE	WALL	688	3000	80	120	8	1
W2	MCGRAW-EDISON	GALN-SA5C-730-U-T4FT-BZ	EXTERIOR WALL	WALL	35000	3000	70	UNV	269	1
W3	LUMARK	XTOR1B-Y	EXTERIOR WALL	WALL	1300	3000	70	120	12	1
X1	MCGRAW-EDISON	GALN-SA5C-730-U-T4W-BZ	EXTERIOR POLE LIGHT	POLE	35000	3000	70	UNV	269	1,5
X2	MCGRAW-EDISON	GALN-SA4C-730-U-SLR-BZ	EXTERIOR POLE LIGHT	POLE	24000	3000	70	UNV	213	1,5
X3	MCGRAW-EDISON	GALN-SA1C-730-U-T2-BZ	EXTERIOR POLE LIGHT	POLE	7100	3000	70	UNV	57	1,6

NOTES:

1. VERIFY LIGHT FIXTURE FINISHES WITH OWNER / ARCHITECT PRIOR TO INSTALLATION
2. SELECTABLE LUMENS SET TO 2000
3. WITH RED LETTERS
4. MOUNT AT 8' A.F.F.
5. 22' SSS POLE ON 3' BASE
6. 10' SSS POLE ON 2' BASE
7. SEE PLANS FOR TOTAL FIXTURE LENGTHS. CONTRACTOR TO PROVIDE APPROPRIATE DRIVERS, SNAP TYPE CONNECTORS, AND STANDARD ALUMINUM CHANNEL.
8. CONTRACTOR TO PROVIDE (9) LED CANDELABRA TORPEDO BULBS PER FIXTURE.

STATE OF MISSOURI
KEATON E. LEISINGER
NUMBER PE-2021035875
PROFESSIONAL ENGINEER

Keaton E. Leisinger, P.E. Mar. 17th, 2023
PE-2021035875
MO Certificate of Authority # 2018029680

J-SQUARED ENGINEERING
2400 Bluff Creek Drive, Suite 101
Columbia, Missouri 65201
573 - 234 - 4492 phone
www.j-squaredeng.com

J2 PROJECT No:	J20930
J2 DESIGN:	KEL

ISSUE TITLE	DATE
PERMIT SET	3 - 17 - 2023

Mechanical - Electrical - Plumbing Design Drawings for

Hawk Ridge Dental Care

8625 HWY N
Lake Saint Louis, MO 63367

SHEET TITLE

ELECTRICAL SCHEDULES

SHEET NUMBER

E601

SANITARY SEWER PLAN SYMBOL LEGEND

- SANITARY SEWER PIPING
- STORM SEWER PIPING
- VENT PIPING
- PIPING TURNED DOWN / TURNED UP
- TIE INTO EXISTING

SANITARY SEWER PLAN GENERAL NOTES:

1. SEE SHEET P501 FOR ADDITIONAL PLUMBING NOTES, DETAILS, & SCHEDULES.

SANITARY SEWER PLAN KEY NOTES:

1. SEE SIT PLAN FOR CONTINUATION.
2. 3" STORM DRAIN RUN WITHIN WALL.
3. HUB DRAIN IN WALL FOR CONDENSATE DRAIN. COORDINATE WITH HVAC CONTRACTOR FOR EXACT PLACEMENT. SEE HUB DRAIN DETAIL FOR FURTHER INFORMATION.
4. PLASTER TRAP PROVIDED AND INSTALLED BY PLUMBING CONTRACTOR.
5. SEE SITE PLAN FOR CONTINUATION.
6. 4" STORM SEWER OUTLET ABOVE GRADE.

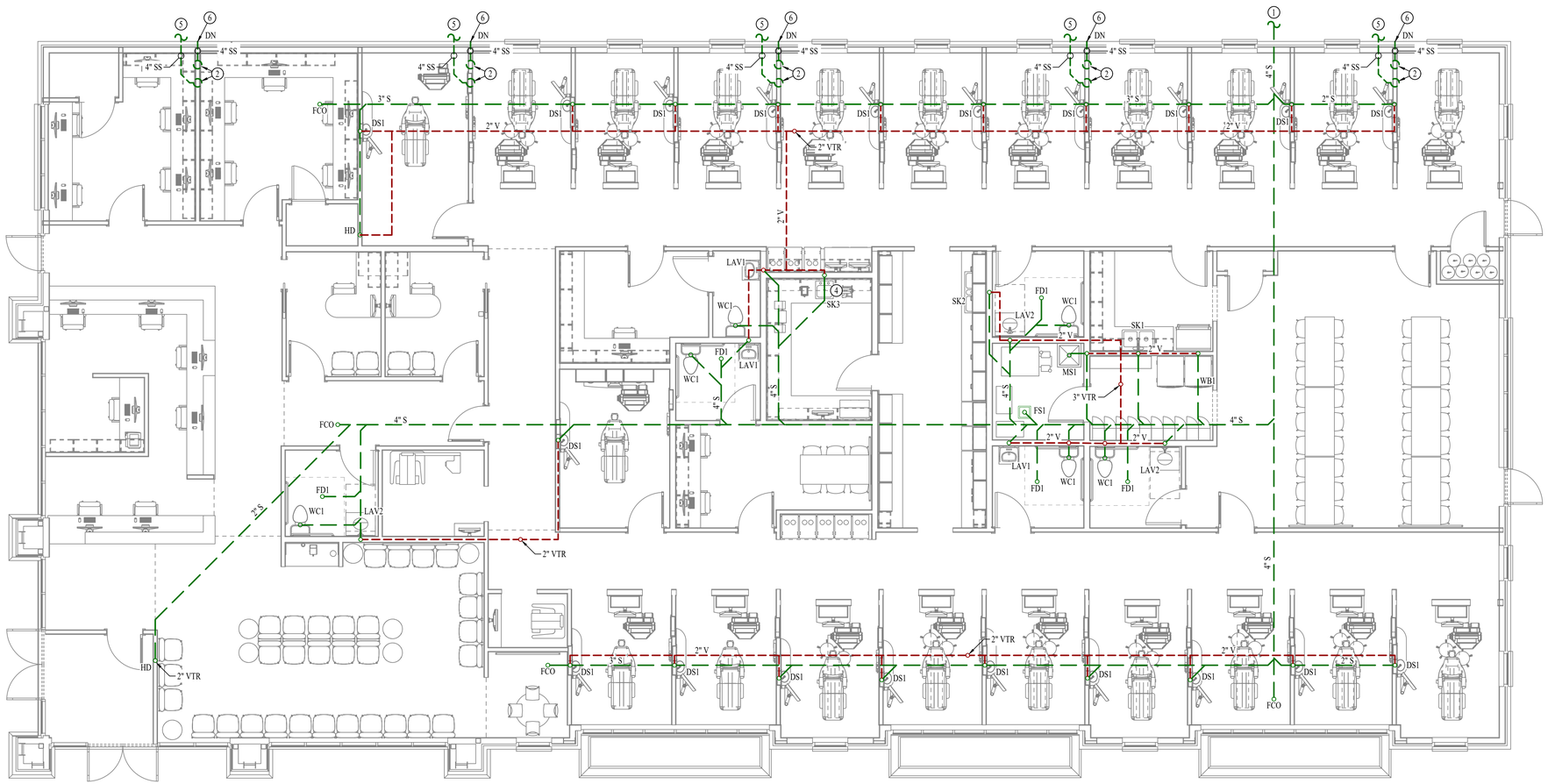

SANITARY SEWER PLAN

SCALE: 3/16" = 1'-0"

STATE OF MISSOURI
KEATON E. LEISINGER
NUMBER PE-2021035875
PROFESSIONAL ENGINEER

Keaton E. Leisinger, P.E. Mar. 17th, 2023
PE-2021035875
MO Certificate of Authority # 2018029680

J-SQUARED ENGINEERING
2400 Bluff Creek Drive, Suite 101
Columbia, Missouri 65201
573 - 234 - 4492 phone
www.j-squaredeng.com

J2 PROJECT No:	J20930
J2 DESIGN:	KEL

ISSUE TITLE	DATE
PERMIT SET	3 - 17 - 2023

Mechanical - Electrical - Plumbing Design Drawings for

Hawk Ridge Dental Care

8625 HWY N
Lake Saint Louis, MO 63367

SHEET TITLE

SANITARY SEWER PLAN

SHEET NUMBER

PS101

WATER & GAS PLAN SYMBOL LEGEND

- COLD WATER LINE
- COLD WATER LINE (UNDER FLOOR)
- HOT WATER LINE
- HOT WATER RECIRCULATION LINE
- FILTERED WATER LINE
- WATER METER
- VALVE
- PUMP
- GAS LINE
- GAS METER
- AIR LINE
- PIPING TURNED DOWN / TURNED UP
- TIE INTO EXISTING

WATER & GAS PLAN GENERAL NOTES:

1. SEE SHEET P501 FOR ADDITIONAL PLUMBING NOTES, DETAILS, & SCHEDULES.

WATER & GAS PLAN KEY NOTES:

1. NEW GAS METER. TOTAL CONNECTED LOAD = 540K BTU @ 11 W.C. DELIVERY PRESSURE. COORDINATE WITH SPIRE ENERGY.
2. SEE SITE PLAN FOR CONTINUATION. TOTAL CONNECTED LOAD = 45 WSFU @ 27 GPM.
3. CONTRACTOR TO PROVIDE INSTRUMENT WASHER. COORDINATE EXACT PURCHASE WITH OWNER. EQUAL TO DIHR/KROMO #DS50.

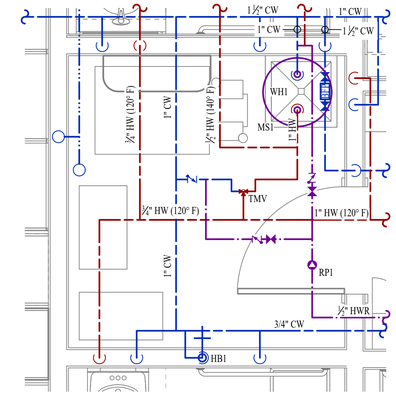

ENLARGED WATER & GAS PLAN

SCALE: 1/2" = 1'-0"

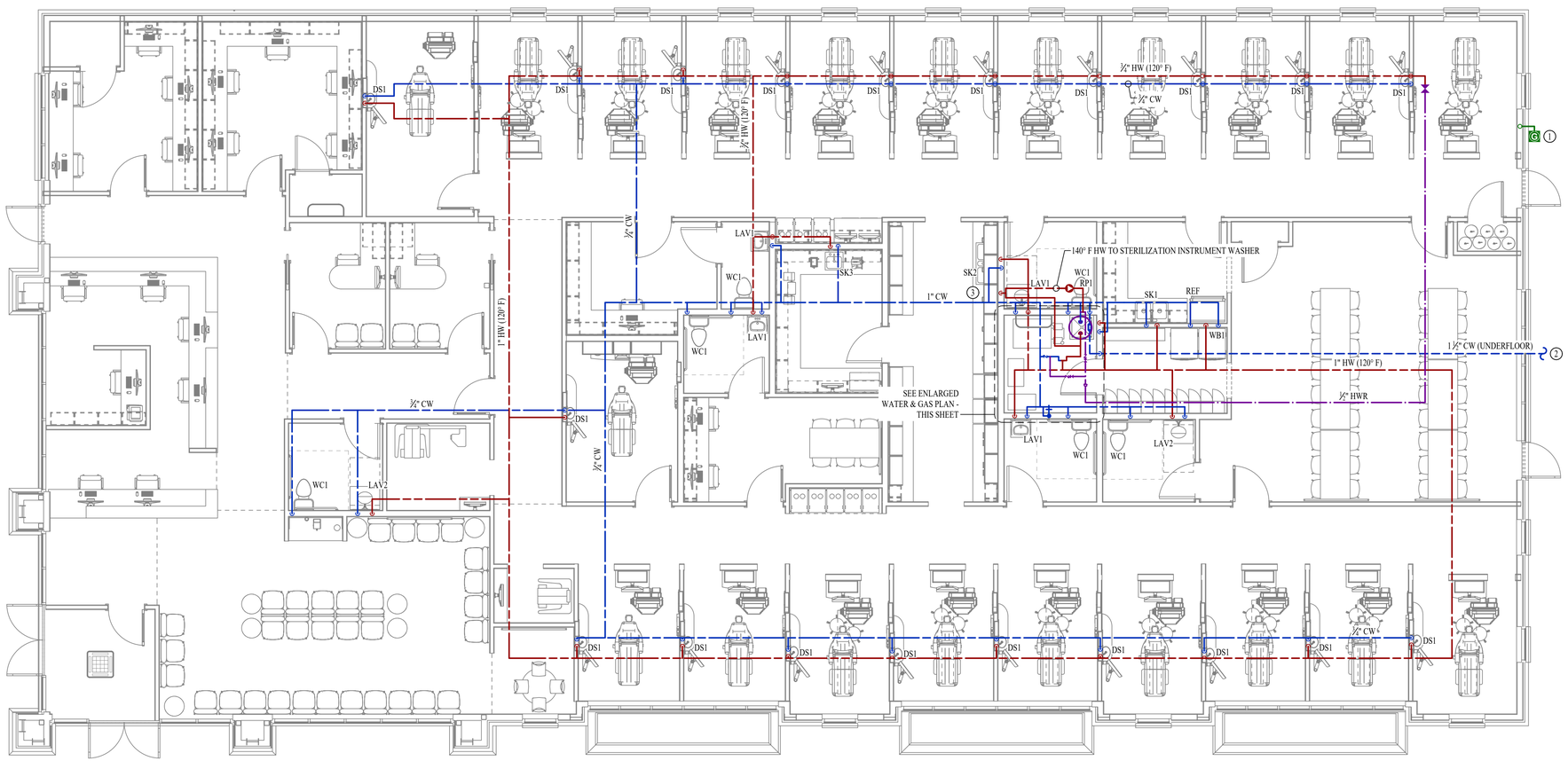

WATER & GAS PLAN

SCALE: 3/16" = 1'-0"

STATE OF MISSOURI
KEATON E. LEISINGER
NUMBER PE-2021035875
PROFESSIONAL ENGINEER

Keaton E. Leisinger, P.E. Mar. 17th, 2023
PE-2021035875
MO Certificate of Authority # 2018029680

J-SQUARED ENGINEERING
2400 Bluff Creek Drive, Suite 101
Columbia, Missouri 65201
573 - 234 - 4492 phone
www.j-squaredeng.com

J2 PROJECT No:	J20930
J2 DESIGN:	KEL

ISSUE TITLE	DATE
PERMIT SET	3 - 17 - 2023

Mechanical - Electrical - Plumbing Design Drawings for

Hawk Ridge Dental Care

8625 HWY N
Lake Saint Louis, MO 63367

SHEET TITLE

WATER & GAS PLAN

SHEET NUMBER

PW101

DENTAL VAC & AIR PLAN SYMBOL LEGEND

- VACUUM LINE (UNDER FLOOR)
- AIR LINE
- NITROUS OXIDE
- OXYGEN
- VALVE
- PIPING TURNED DOWN / TURNED UP
- TIE INTO EXISTING

GENERAL NOTES:

1. SEE SHEET P501 FOR ADDITIONAL DETAILS AND SCHEDULES.
2. COORDINATE VACUUM AND COMPRESSED AIR ROUTING LOCATIONS WITH ALL OTHER UTILITIES TO PREVENT POTENTIAL INTERFERENCES.
3. REFER TO DENTAL PLANS FOR ADDITIONAL INFORMATION REGARDING VAC AND AIR INSTALLATION.

KEY NOTES:

1. ½" AIR WITH ¼" SHUT OFF & ½" COPPER VAC CONNECTIONS AT HEAD CABINET. COORDINATE WITH DENTAL EQUIPMENT SUPPLIER FOR FINAL CONNECTION DETAILS.
2. NITROUS OXIDE, OXYGEN & VAC OUTLET LOCATION. COORDINATE WITH DENTAL GAS SUPPLIER FOR FINAL CONNECTION DETAILS.
3. AIR CONNECTION ABOVE COUNTER. COORDINATE FINAL LOCATION WITH DENTAL EQUIPMENT SUPPLIER PRIOR TO ROUGH-IN.
4. AMALGAM SEPARATOR PROVIDED BY DENTAL EQUIPMENT SUPPLIER, INSTALLED BY CONTRACTOR.
5. CONTRACTOR TO PROVIDE 2" PVC EXHAUST THRU ROOF PER MANUFACTURE REQUIREMENTS.
6. CONTRACTOR TO PROVIDE 2" PVC EXHAUST THRU ROOF PER MANUFACTURE REQUIREMENTS.

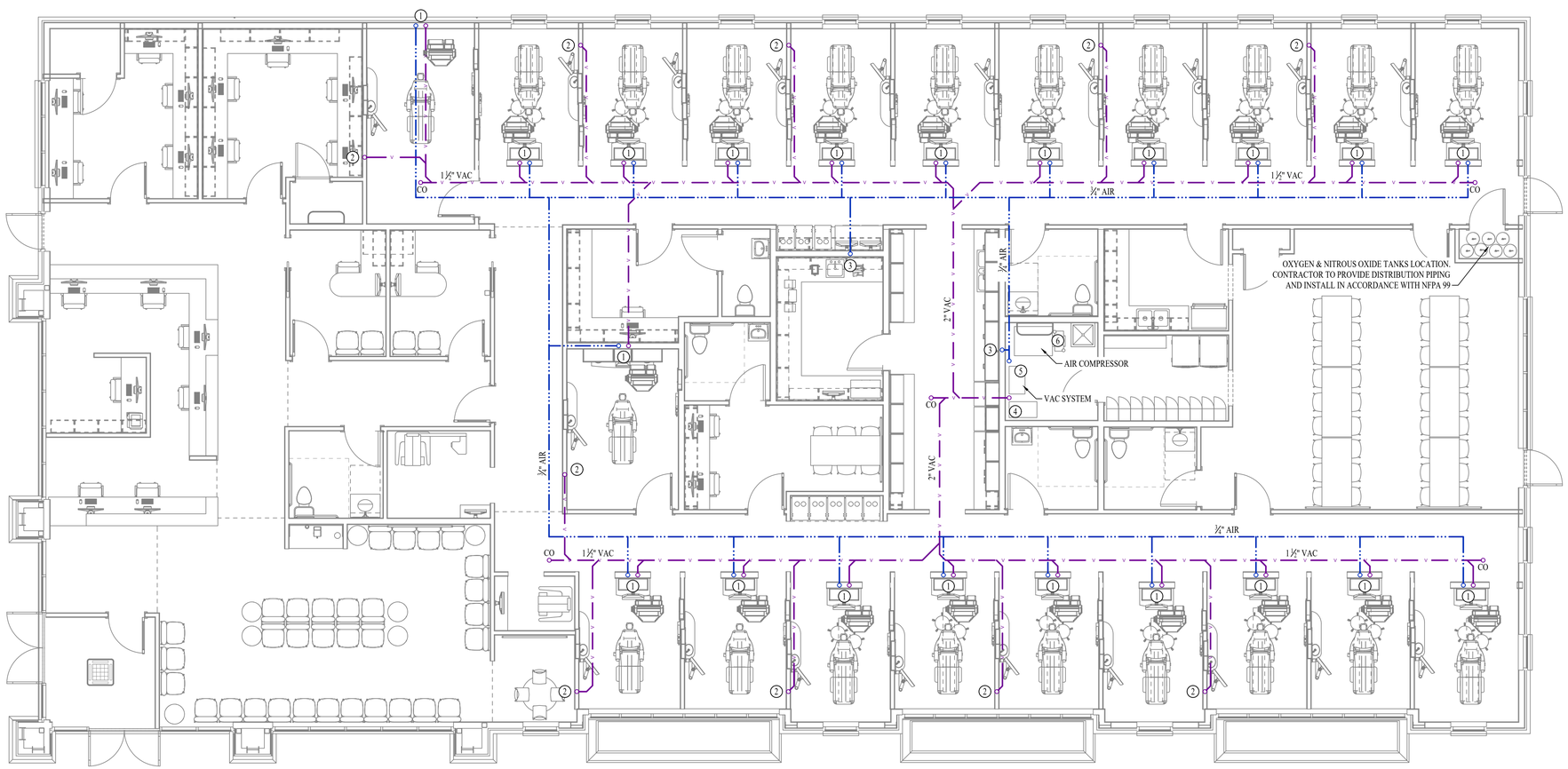

AIR, VAC, & DENTAL GAS PLAN

SCALE: 3/16" = 1'-0"

STATE OF MISSOURI
KEATON E. LEISINGER
NUMBER PE-2021035875
PROFESSIONAL ENGINEER

Keaton E. Leisinger, P.E. Mar. 17th, 2023
PE-2021035875
MO Certificate of Authority # 2018029680

J-SQUARED ENGINEERING
2400 Bluff Creek Drive, Suite 101
Columbia, Missouri 65201
573 - 234 - 4492 phone
www.j-squaredeng.com

J2 PROJECT No:	J20930
J2 DESIGN:	KEL

ISSUE TITLE	DATE
PERMIT SET	3 - 17 - 2023

Mechanical - Electrical - Plumbing Design Drawings for

Hawk Ridge Dental Care

8625 HWY N
Lake Saint Louis, MO 63367

SHEET TITLE

AIR, VAC, & DENTAL GAS PLAN

SHEET NUMBER

PD101

PLUMBING SPECIFICATIONS

1. GENERAL
   - 1.1. PLUMBING CONTRACTOR IS RESPONSIBLE TO PROVIDE ALL ESCUTCHEONS, ¼ TURN STOPS, P-TRAPS, AND SUPPLY LINES TO PROVIDE A COMPLETE SYSTEM AT EACH FIXTURE INDICATED ON PLANS UNLESS NOTED OTHERWISE.
2. SANITARY
   - 2.1. BELOW AND ABOVE GRADE WASTE AND VENT PIPING IN BUILDING TO BE SOLID CORE SCH. 40 PVC DWV.
   - 2.2. NO PIPE SMALLER THAN 2" BELOW GRADE.
   - 2.3. WASTE AND VENT PIPING IN PLENUMS TO BE CAST IRON, OR PVC WITH AN INSULATION WRAP LISTED FOR USE AS SUCH AN ASSEMBLY.
   - 2.4. ALL VENT PIPE TERMINATIONS ARE TO BE LOCATED EITHER 10' HORIZONTALLY OR 3' ABOVE MECHANICAL AIR INTAKE LOCATIONS.
3. DOMESTIC WATER
   - 3.1. DOMESTIC WATER PIPING TO BE EITHER COPPER OR PEX. WHERE PEX PIPING IS USED, IT SHALL BE INCREASED ONE PIPE SIZE FROM WHAT IS INDICATED ON PLANS FOR ALL PORTIONS OF THE SYSTEM.
   - 3.2. PEX-A MAY BE INSTALLED AT SIZES INDICATED ON PLANS IF AN ENGINEERED PLAN IS SUBMITTED SHOWING ACCEPTABLE PRESSURE DROPS AND FLUID VELOCITIES, APPROVAL MUST BE GRANTED PRIOR TO PURCHASE AND INSTALLATION.
   - 3.3. COPPER WATER PIPING BELOW GRADE SHALL BE TYPE "K". BELOW GRADE JOINTS SHALL BE SILVER SOLDERED. THERE SHALL BE NO JOINTS IN WATER PIPING LOCATED BENEATH BUILDING SLAB.
   - 3.4. COPPER WATER PIPING ABOVE GRADE SHALL BE TYPE "L".
   - 3.5. PROVIDE WATER HAMMER ARRESTORS AT ALL QUICK-CLOSE VALVES. FIXTURES REQUIRING WATER HAMMER ARRESTORS INCLUDE BUT ARE NOT LIMITED TO FLUSH VALVES, SENSOR FAUCETS, AND WASHING MACHINE BOXES. AIR CHAMBERS ARE NOT ACCEPTABLE.
   - 3.6. DOMESTIC WATER PIPING INSULATION
     - 3.6.1. ALL HW PIPING, WHETHER COPPER OR PEX, SHALL BE INSULATED WITH PLENUM RATED CLOSED CELL ELASTOMERIC INSULATION. FOR PIPING LESS THAN 1½", INSULATION THICKNESS TO BE 1". FOR PIPING 1½" OR GREATER, INSULATION THICKNESS SHALL BE 1½".
     - 3.6.2. CW COPPER PIPING TO INSULATED WITH ½" PLENUM RATED CLOSED CELL ELASTOMERIC INSULATION. CW PEX NEED NOT BE INSULATED UNLESS NOTED OTHERWISE.
4. GAS PIPING
   - 4.1. ABOVE GRADE NATURAL GAS AND LP PIPING TO BE SCH. 40 BLACK STEEL WITH CLASS 150 THREADED FITTINGS.
   - 4.2. WHERE PIPING IS EXPOSED ON EXTERIOR FACE OF BUILDING, PAINT TO MATCH BUILDING. PAINT YELLOW IN ALL OTHER LOCATIONS.
   - 4.3. ON ROOFTOPS, INSTALL GAS PIPE WITH "ROOFTOP BLOX" PER MANUFACTURE'S INSTRUCTION.
5. STORM DRAIN PIPING
   - 5.1. ABOVE AND BELOW GRADE STORM PIPING SHALL BE SOLID CORE SCHEDULE 40 PVC.
   - 5.2. ALL PRIMARY & SECONDARY STORM DRAIN PIPING & FITTINGS SHALL BE INSULATED WITH ½" FIBERGLASS INSULATION WITH ASJ JACKET.

PLUMBING CONNECTION SIZING SCHEDULE

FIXTURE		SANITARY PIPING		SUPPLY PIPING	
TYPE	TYPICAL ABBREVIATION	WASTE CONNECTION	VENT CONNECTION	COLD WATER CONNECTION	HOT WATER CONNECTION
DRINKING FOUNTAIN	DF	1-1/2"	1-1/4"	1/2"	-
FLOOR DRAIN	FD	3"	2"	-	-
HAND / HAIR SINK	HS / SK	2"	1-1/4"	1/2"	1/2"
HOSE BIBB	HB	-	-	3/4"	-
LAVATORY	LAV	1-1/2"	1-1/4"	1/2"	1/2"
MOP SINK	MS	3"	1-1/2"	1/2"	1/2"
ICE MAKER OUTLET BOX	REF	-	-	1/2"	-
SHOWER	SH	3"	1-1/2"	1/2"	1/2"
URINAL	UR	2"	1-1/4"	3/4"	-
WATER CLOSET (FLUSH TANK)	WC	3"	2"	1/2"	-
WATER CLOSET (FLUSH VALVE)	WC	3"	2"	1"	-

NOTES:
1. SIZES SHOWN ABOVE ARE TYPICAL UNLESS NOTED OTHERWISE ON PLANS

PLUMBING FIXTURE SCHEDULE

TAG	DESCRIPTION	MANUFACTURER (OR EQUAL)	MODEL (OR EQUAL)	NOTES
BFP	BACKFLOW PREVENTER	WILKINS	975XL2	1"
DS1	DENTAL SINK			PROVIDED AND INSTALLED BY DENTAL EQUIPMENT SUPPLIER
DN	DOWNSPOUT NOZZLE	ZURN	Z199	
EXP	EXPANSION TANK	WATTS	PLT-5	
FCO	FLOOR CLEANOUT	ZURN	1400	
FD1	FLOOR DRAIN	ZURN	Z415-BZ	WITH Z1072 TRAP SEAL
FS1	FLOOR SINK	ZURN	FS12-6	WITH HALF GRATE
HB1	HOSE BIB	JR SMITH	5670-H	INTERIOR HOSE BIB WITH VACUUM BREAKER
HD	HUB DRAIN			
LAV1	LAVATORY (WALL HUNG W/MANUAL FAUCET)	NAMEEK'S	TECLA MAR01011	WITH JOSS & MAIN KBBB4545 FAUCET, 1/4 TURN STOPS, BRAIDED STAINLESS STEEL SUPPLIES, AND TRUBRO LAVGUARD 2
LAV2	LAVATORY (DROP-IN W/ MANUAL FAUCET)	KOHLER	K-2881-0	WITH JOSS & MAIN KBBB4545 FAUCET, 1/4 TURN STOPS, AND BRAIDED STAINLESS STEEL SUPPLIES
MS1	MOP SINK	FIAT	MSB2424	WITH ZURN Z843M1 FAUCET WITH WALL HOOK
RD	ROOF DRAIN	ZURN	Z100	
REF	REFRIGERATOR BOX	SOUIX CHIEF	696-G1000	
RP1	RECIRCULATION PUMP	GRUNDFOS	UP10-15BUA/TLC	WITH AQUASTAT CONTROL KIT
SK1	DOUBLE COMPARTMENT SINK W/DISPOSAL (33x22x7)	ELKAY	CR3322	WITH DELTA 9182-AR-PR-DST FAUCET AND INSINKERATOR BADGER 1 DISPOSAL WITH POWER CORD
SK2	TRIPLE COMPARTMENT SINK (39x20x10)	ELKAY	ELUH3920	WITH DELTA 9182-AR-PR-DST FAUCET
SK3	SINGLE COMPARTMENT SINK (16x18x8)	ELKAY	DCFU1618	WITH TWO HANDLED WATERSAVER #12222 FAUCET WITH GUARDIAN #GI100 EYE WASH STATION.
TMV	THERMOSTATIC MIXING VALVES	LEONARD	LV-981A-LF	DELIVERY TEMPERATURE 120°F
WB1	WASHER BOX	OATEY	38529	WASHER BOX W/ 1/4 TURN VALVES
WC1	WATER CLOSET - ADA HEIGHT - TANK	KOHLER	K-3575-TR-0	WITH KOHLER K-4636 SEAT, STAINLESS BRAIDED SUPPLY, AND 1/4 TURN SHUT-OFF.
WH1	WATER HEATER	A.O. SMITH	PELU-40	40 GALLON, 208V, 4500W, 140°F DELIVERY TEMPERATURE
YCO	YARD CLEAN OUT	ZURN	Z1400	

NOTES:
1. VERIFY NECESSARY FIXTURES MEET ADA REQUIREMENTS WITH ARCHITECT PRIOR TO INSTALLATION

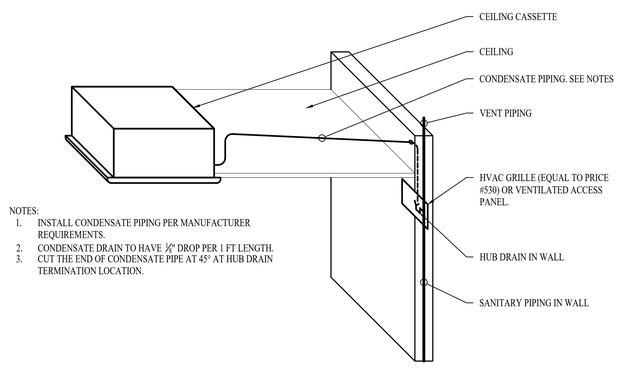

HUB DRAIN (IN WALL) DETAIL

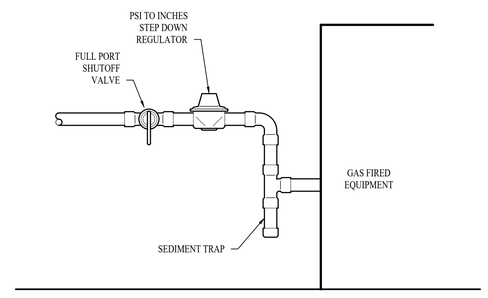

GAS EQUIPMENT SUPPLY DETAIL W/ REGULATOR

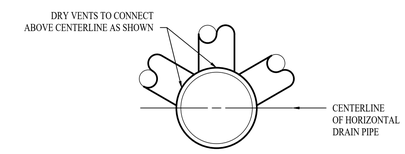

DRY VENT DETAIL

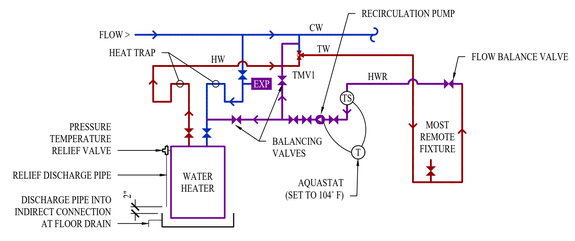

HOT WATER RECIRCULATION DETAIL W/ MASTER MIXING VALVE

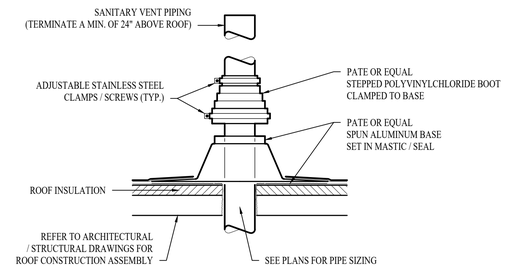

SANITARY VENT THRU ROOF DETAIL

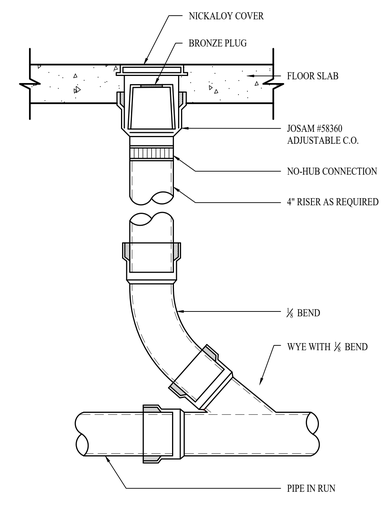

INTERIOR C.O. DETAIL

STATE OF MISSOURI
KEATON E. LEISINGER
NUMBER PE-2021035875
PROFESSIONAL ENGINEER

Keaton E. Leisinger, P.E. Mar. 17th, 2023
PE-2021035875
MO Certificate of Authority # 2018029680

J-SQUARED ENGINEERING
2400 Bluff Creek Drive, Suite 101
Columbia, Missouri 65201
573 - 234 - 4492 phone
www.j-squaredeng.com

J2 PROJECT No:	J20930
J2 DESIGN:	KEL

ISSUE TITLE	DATE
PERMIT SET	3 - 17 - 2023

Mechanical - Electrical - Plumbing Design Drawings for

Hawk Ridge Dental Care

8625 HWY N
Lake Saint Louis, MO 63367

SHEET TITLE

PLUMBING DETAILS & SCHEDULES

SHEET NUMBER

P501